A mixed-mode biquadratic circuit employing OTAs and grounded capacitors

Takao Tsukutani [1], Masumi Fukuma [1], Yasuaki Sumi [2] and Noburu Yabuki [3]

[1] Department of Electrical and Computer Science, Matsue College of Technology
14-4 Nishi-ikuma, Matsue, Shimane 690-8518, Japan
[2] Tottori City Colleage of Medical Nurse
103-2 Higashi-honji, Tottori, Tottori 680-6835, Japan
[3] Department of Electronics and Computer Engineering, Tsuyama College of Technology
624-1 Numa, Tsuyama, Okayama 708-8509, Japan
E-mail: [1] {tsukutani, fukuma}@matsue-ct.ac.jp, [2] sumi@class.tcmn.ac.jp, [3] yabuki@tsuyama-ct.ac.jp

Abstract: This paper introduces a mixed-mode biquadratic circuit employing operational trans-conductance amplifiers (OTAs) and grounded capacitors. The biquadratic circuit can perform mixed-mode operation by selecting the input and output terminals. Additionally, the circuit enables to realize low-pass, band-pass, high-pass, band-stop and all-pass transfer functions suitably choosing the input terminals. The circuit parameters ω_0 and Q can be tuned orthogonally through adjusting the trans-conductance gains of the OTAs. The biquadratic circuit enjoys very low sensitivities with respect to the circuit active and passive components. The achievement examples are given together with simulation results by PSPICE.

Keywords — Active circuit, Mixed-mode operation
Biquadratic characteristics, OTAs

1. Introduction

High performance active circuits have received much attention. It is well known that the OTA provides highly linear electronic tunability and wide tunable range of its trans-conductance gain. Additionally, OTA-based circuit requires no external resistors, hence it is very suitable for monolithic integration. The current-mode and voltage-mode biquadratic circuits using the OTAs have been discussed previously [1]-[6]. It is much desirable for the biquadratic circuit design that various circuit characteristics can be realized with no component matching conditions. Additionally, it is required to set the circuit parameters ω_0, Q and H orthogonally or independently. In applications to analogue signal processing, it may be desirable to synthesize mixed-mode biquadratic circuit with input current or voltage and output current or voltage. The mixed-mode biquadratic circuit using six OTAs and two grounded capacitors has already been reported in the past [1]. However, the mixed-mode biquadratic circuit with above-mentioned performances has not yet been studied sufficiently.

This paper introduces a mixed-mode biquadratic circuit employing five OTAs and two grounded capacitors. The biquadratic circuit can perform the current-mode, voltage-mode, trans-admittance-mode and trans-impedance-mode operations by selecting the input and output terminals. Additionally, the circuit enables to realize low-pass (LP), band-pass (BP), high-pass (HP), band-stop (BS) and all-pass (AP) characteristics suitably choosing the input terminals. The circuit parameters ω_0 and Q can be tuned orthogonally through adjusting the trans-conductance gains of the OTAs. It is made clear from sensitivity analysis that the circuit enjoys very low sensitivities to the circuit active and passive components. The achievement examples are given together with simulation results by PSPICE.

2. OTA

Figure 1 shows the symbol for the OTA. This shows dual current output OTA.

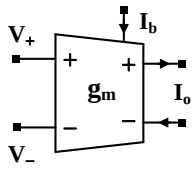

Figure 1. Symbol for OTA.

The current output I_o is given by:

$$I_o = \pm g_m (V_+ - V_-) \tag{1}$$

where g_m denotes the trans-conductance gain.

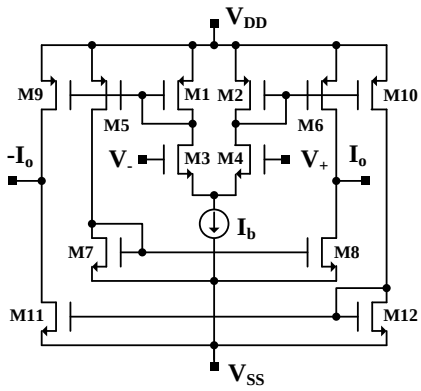

Figure 2. OTA with MOS transistors.

In (1), the sign "±" shows the polarity of the current output. The OTA [2] with MOS transistors is shown in Fig.2. The trans-conductance gain g_m can be characterized by:

$$g_m = \sqrt{\mu_n C_{ox} \frac{W}{L} I_b} \tag{2}$$

where μ_n, C_{ox}, W/L and I_b are the electron mobility of NMOS, gate oxide capacitance per unit area, transistor

aspect ratio and bias current, respectively. The transconductance gain g_m is adjustable by a supplied bias current I_b.

3. Circuit configuration and analysis

Figure 3 shows the mixed-mode biquadratic circuit configuration. The circuit is constructed with five OTAs and two grounded capacitors.

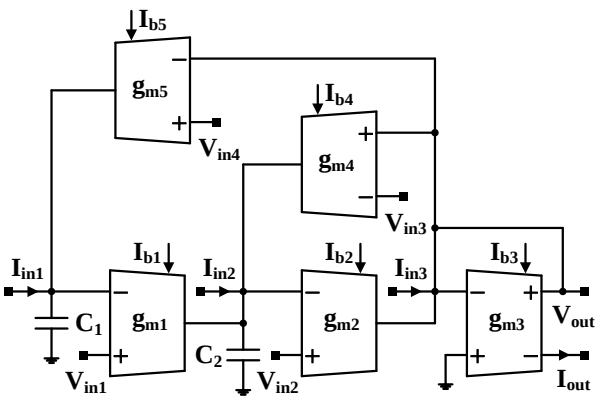

Figure 3. Mixed-mode biquadratic circuit configuration.

Routine analysis yields the voltage and current outputs ($V_{out}(s)$ and $I_{out}(s)$) given by

$$V_{out}(s) = \frac{N_v(s)}{D(s)} \quad (3) \qquad I_{out}(s) = \frac{N_i(s)}{D(s)} \quad (4)$$

where

$$N_v(s) = \frac{1}{g_{m3}}[\{I_{in3}(s) + g_{m2}V_{in2}(s)\}s^2 - \frac{g_{m2}}{C_2}\{I_{in2}(s) + g_{m1}V_{in1}(s) - g_{m4}V_{in3}(s)\}s + \frac{g_{m1}g_{m2}}{C_1C_2}\{I_{in1}(s) + g_{m5}V_{in4}(s)\}] \quad (5)$$

$$N_i(s) = g_{m3}N_v(s) \quad (6)$$

$$D(s) = s^2 + \frac{g_{m2}g_{m4}}{C_2g_{m3}}s + \frac{g_{m1}g_{m2}g_{m5}}{C_1C_2g_{m3}} \quad (7)$$

It is found from the equations above that the circuit can perform the mixed-mode operation by selecting the input and output terminals. And various circuit transfer functions can easily be realized choosing the input terminals suitably.

In current-mode operation, the way to realize the low-pass, band-pass, high-pass, band-stop and all-pass transfer functions is as follows:

Current-mode operation ($V_{in1}=V_{in2}=V_{in3}=V_{in4}=0$)

LP: $I_{in1}=I_{in}$, $I_{in2}=I_{in3}=0$

$$T_{LP}(s) = \frac{I_{out}(s)}{I_{in}(s)} = \frac{g_{m1}g_{m2}/C_1C_2}{D(s)} \quad (8)$$

BP: $I_{in2}=I_{in}$, $I_{in1}=I_{in3}=0$

$$T_{BP}(s) = \frac{I_{out}(s)}{I_{in}(s)} = -\frac{(g_{m2}/C_2)s}{D(s)} \quad (9)$$

HP: $I_{in3}=I_{in}$, $I_{in1}=I_{in2}=0$

$$T_{HP}(s) = \frac{I_{out}(s)}{I_{in}(s)} = \frac{s^2}{D(s)} \quad (10)$$

BS: $I_{in1}=I_{in3}=I_{in}$, $I_{in2}=0$

$$T_{BS}(s) = \frac{I_{out}(s)}{I_{in}(s)} = \frac{s^2 + g_{m1}g_{m2}/C_1C_2}{D(s)} \quad (11)$$

AP: $I_{in1}=I_{in2}=I_{in3}=I_{in}$

$$T_{AP}(s) = \frac{I_{out}(s)}{I_{in}(s)} = \frac{s^2 - (g_{m2}/C_2)s + g_{m1}g_{m2}/C_1C_2}{D(s)} \quad (12)$$

The circuit parameters ω_0 and Q can be expressed as:

$$\omega_0 = \sqrt{\frac{g_{m1}g_{m2}g_{m5}}{C_1C_2g_{m3}}}, \quad Q = \frac{1}{g_{m4}}\sqrt{\frac{C_2g_{m1}g_{m3}g_{m5}}{C_1g_{m2}}} \quad (13)$$

The circuit parameters ω_0 and Q are tuned orthogonally by adjusting the trans-conductance gains of the OTAs.

The sensitivities with respect to circuit active and passive components (i.e. trans-conductance gains and capacitors) are shown in Table 1. We can find from these values that the biquadratic circuit enjoys very low sensitivities to the circuit components. It noted that the sensitivities do not depend on the circuit component values.

Table 1. Sensitivity to circuit components.

x	$S_x^{\omega_0}$	S_x^Q
g_{m1}	0.5	0.5
g_{m2}	0.5	-0.5
g_{m3}	-0.5	0.5
g_{m4}	0.0	-1.0
g_{m5}	0.5	0.5
C_1	-0.5	-0.5
C_2	-0.5	0.5

Next, we consider to realize the voltage-mode circuit transfer functions. In voltage-mode operation, the low-pass, band-pass, high-pass, band-stop and all-pass transfer functions are obtained by selecting the input terminals as follows:

Voltage-mode operation ($I_{in1}=I_{in2}=I_{in3}=0$)

LP: $V_{in4}=V_{in}$, $V_{in1}=V_{in2}=V_{in3}=0$

$$T_{LP}(s) = \frac{V_{out}(s)}{V_{in}(s)} = \frac{g_{m1}g_{m2}g_{m5}/C_1C_2g_{m3}}{D(s)} \quad (14)$$

BP: $V_{in1}=V_{in}$, $V_{in2}=V_{in3}=V_{in4}=0$

$$T_{BP}(s) = \frac{V_{out}(s)}{V_{in}(s)} = -\frac{(g_{m1}g_{m2}/C_2g_{m3})s}{D(s)} \quad (15)$$

HP: $V_{in3}=V_{in}$, $V_{in1}=V_{in3}=V_{in4}=0$

$$T_{HP}(s) = \frac{V_{out}(s)}{V_{in}(s)} = \frac{g_{m2}}{g_{m3}}\frac{s^2}{D(s)} \quad (16)$$

BS: $V_{in2}=V_{in4}=I_{in}$, $V_{in1}=V_{in3}=0$

$$T_{BS}(s)=\frac{V_{out}(s)}{V_{in}(s)}=\frac{g_{m2}}{g_{m3}}\frac{s^2+g_{m1}g_{m5}/C_1C_2}{D(s)} \quad (17)$$

AP: $V_{in1}=V_{in2}=V_{in4}=V_{in}$, $V_{in3}=0$

$$T_{AP}(s)=\frac{V_{out}(s)}{V_{in}(s)}=\frac{g_{m2}}{g_{m3}}\frac{s^2-(g_{m1}/C_2)s+g_{m1}g_{m5}/C_1C_2}{D(s)} \quad (18)$$

In addition, the trans-admittance-mode or trans-impedance-mode operation is obtained from selecting the input terminal $I_{in}(s)$ or $V_{in}(s)$ and output terminal $V_{out}(s)$ or $I_{out}(s)$.

4. Design examples and simulation results

As a design example, we consider a realization of the current-mode circuit characteristic with the cut-off frequency f_0 (=$\omega_0/2\pi$)=1MHz, quality factor Q=1.0 and gain constant H=1.0. In this simulation, we have used a macro model of the OTA shown in Fig 2.

To realize the circuit characteristic above, we have determined that the bias currents and capacitors were $I_{b1}=I_{b2}=I_{b3}=I_{b4}=I_{b5}=40\mu A$ and $C_1=C_2=17pF$, respectively. Also, we have set the supply voltages and input current at $V_{DD}=-V_{SS}=1.85V$ and $I_{in}=10\mu A$.

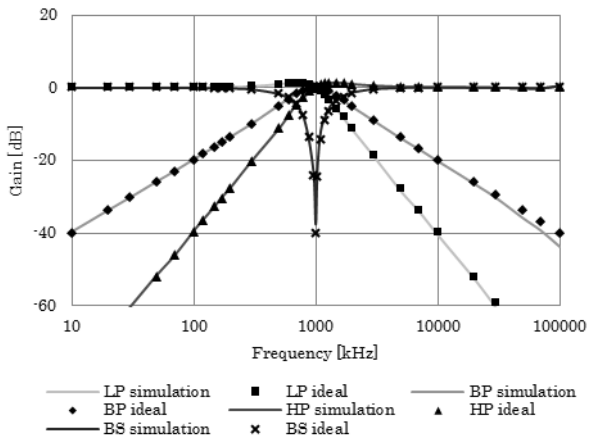

(a)

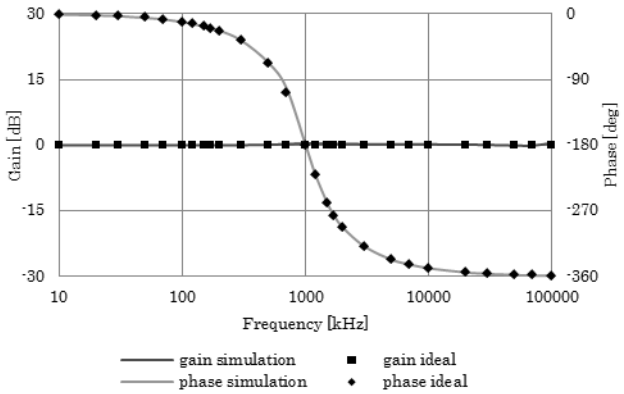

(b)

Figure 4. Simulation results (current-mode circuit).

Figure 4 shows the frequency responses simulated with PSPICE. Figure 4 (a) shows the low-pass, band-pass, high-pass and band-stop responses. The all-pass response is shown in Fig.4 (b). The simulation responses are favorable enough over a wide frequency range. The power dissipation was 4.83mW.

Figure 5 shows the simulation responses with f_0-tuning (i.e. f_0=500kHz, 1MHz and 2MHz), keeping Q=1.0 and H=1.0. In this case, the capacitors and bias currents were $C_1=C_2=17pF$ and $I_{b3}=I_{b4}=I_{b5}=40\mu A$, $I_{b1}=I_{b2}=9.6\mu A$, 40μA and 210μA, respectively.

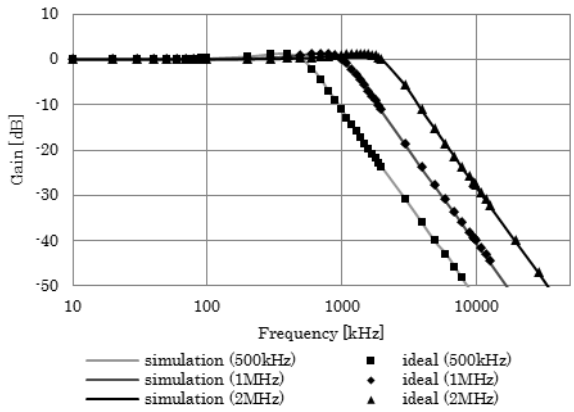

Figure 5. f_0-tuning responses (current-mode circuit).

Figure 6 shows the simulation responses with Q-tuning (i.e. Q=0.707, 1.0, 2.0 and 5.0), keeping f_0=1MHz. In this case, the capacitors and bias currents were $C_1=C_2=17pF$ and $I_{b1}=I_{b2}=I_{b3}=I_{b5}=40\mu A$, $I_{b4}=80\mu A$, 40μA, 10μA and 1.6μA, respectively. It is found that the circuit parameters f_0 and Q can be tuned electronically adjusting the bias currents of the OTAs.

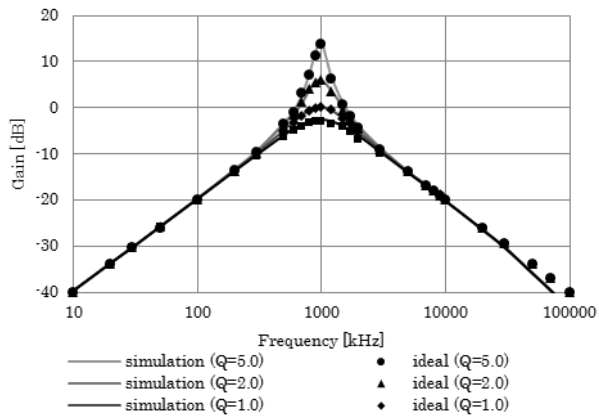

Figure 6. Q-tuning responses (current-mode circuit).

Next, we have considered about the voltage-mode biquadratic circuit. The circuit parameters f_0, Q and H are same as the current-mode ones. Also, we have set that the values of the bias currents and capacitors were all the same as the current-mode circuit.

Figure 7 shows the simulation responses. You can see that the simulation responses are good enough as well as the

current-mode ones. Here, we have set the input voltage V_{in}=100mV. The power dissipation was 4.83mW.

In this simulation, the size of all the MOS transistors have W=4μm and L=2μm. And we have used the parameters of MOSIS 0.5μm for other device parameters.

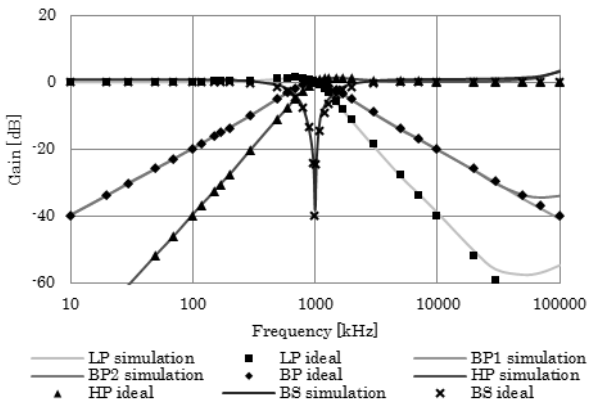

(a)

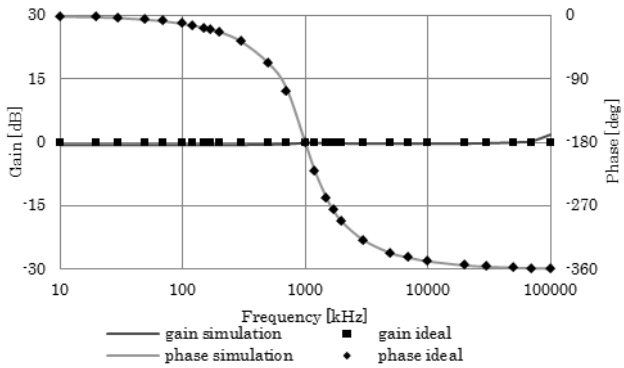

(b)

Figure 7. Simulation results (voltage-mode circuit).

5. Conclusions

A mixed-mode biquadratic circuit employing five OTAs and two grounded capacitors has been proposed. We have demonstrated that the circuit can perform the mixed-mode operation by selecting the input and output terminals, and that the circuit enables to realize the low-pass, band-pass, high-pass, band-stop and all-pass transfer functions by suitably choosing the input terminals. Additionally, the circuit parameters ω_0 and Q can be tuned orthogonally through adjusting the trans-conductance gains of the OTAs. It has been made clear that the biquadratic circuit has very low sensitivities to the circuit active and passive components.

The achievement examples have been given together with simulation results by PSPICE. The simulation responses have been appropriate enough over a wide requency range. The circuit configuration is very suitable for implementation on both bipolar and CMOS technologies.

The non-idealities of the OTA may affect the circuit characteristics. The solution on this will be discussed in the future.

References

[1] M.T. Abuelma'atti, et al., "A novel mixed-mode OTA-C universal filter," *International Journal of Electronics*, vol.92, no.7, pp.375-383, 2005.

[2] D.R. Bhaskar, et al., "New OTA-C universal current-mode/trans-admittance biquads," *IEICE Electronics Express*, vol.2, pp.8-13, 2005.

[3] J. Ramirez-Angulo, et al., "Current-mode continuous-time filters: two design approaches," *IEEE Transactions on Circuits and Systems*, vol.39, no.6, pp.337-341, 1992.

[4] Y. Tao, and J.K. Fidler, "Electronically tunable dual-OTA second-order sinusoidal oscillators/filters with non-interacting controls: a systematic synthesis approach," *ibid*., vol.47, pp.117-129, 2000.

[5] T. Tsukutani, et al., "A realization of multiple circuit transfer functions using OTA-C integrator loop structure," *IEICE Transactions on Fundamentals*, vol.E86-A, no.2, pp.509-512, 2003.

[6] T. Tsukutani, et al., "Electronically tunable inverse active filters employing OTAs and grounded capacitors," *International Journal of Electronics Letters*, online, 2014.