Adaptive Multi-scale Self-similarity-based Enhancement Algorithm for Effective Up-scaling of Thermal Infrared Images

Yong-Jun Kim[1] and Byung Cheol Song [2]
Department of Electronic Engineering, Inha University
100 Inharo, Nam-gu, Incheon 22212, Korea
E-mail: [1]22151288@inha.ac.kr, [2]bcsong@inha.ac.kr

Abstract: Infrared (IR) images usually have blurred edges and weak details in comparison with visible light images. Due to such phenomenon, up-scaled IR images do not provide acceptable visual quality, either. So, we propose an edge enhancement algorithm as a pre-processing for effective up-scaling of IR images. The proposed algorithm utilizes the block-based self-similarity which indicates local similarity between a current image and its scaled ones. First, for each block in the input IR image its edge strength is computed. Then, high-frequency information proper for the computed edge strength is derived. Here, the best self-example of the current block is found from a down-scale determined by the computed edge strength. By adding the extracted high-frequency information to the current block, the definition of the current block is enhanced. Experimental results show that the proposed algorithm provides better edge enhancement than state-of-the-art algorithms. Also, the proposed algorithm outperforms the other algorithm up to 0.07 even in terms of a quantitative metric, i.e., just noticeable blur metric (JNBM).

Keywords—**Image enhancement, Infrared image, Self-similarity**

1. Introduction

Thermal infrared (IR) images can extract important information which visible (VIS) images (VIS) cannot obtain. So IR images are useful for surveillance applications, and high definition IR images become demanding more and more. However, since high-resolution (HR) IR sensors are usually very expensive, it is hard to adopt such expensive sensors in practical products. A possible solution to this problem is to up-scale low-resolution (LR) images by using a high-quality image processing algorithm.

On the other hand, IR images have lower definition due to their inherent blur characteristic than general-purpose VIS images. Such blur phenomenon makes visual quality of conventional up-scaling algorithms such as super-resolution (SR) [1, 2] degraded. So a specific pre-processing is required prior to up-scaling for better visual quality. In general, image enhancement algorithms are categorized into filter-based ones [3-5] and deblur ones [6-8]. Unfortunately, because edges in IR images are considerably blurred, the filter-based approach is not effective. Also, conventional deblur algorithms which are based on deconvolution can produce better edges than filter-based methods. However, they suffer from some visually annoying side-effects such as ringing and halo effects.

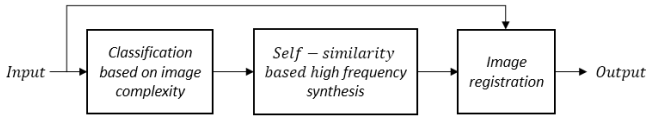

Figure 1. Overall structure of the proposed algorithm

In order to remove blur phenomenon in IR images without artifacts, this paper proposes an adaptive multi-scale self-similarity-based enhancement algorithm.

2. Proposed Algorithm

Fig. 1 shows the oberall structure of the proposed algorithm.

2. 1 Classification based on image complexity

In order to measure the compleixty of each pixel, we compute the edge strength of the pixel via 3x3 Sobel operator. For a 5x5 patch, the edge values are averaged. Then, the average edge strength is compared with four thresholds, i.e., T_0, T_1, T_2, T_3 and each patch is categroized into five cases, that is, no processing, 1/2-scale, 2/3-scale, 3/4-scale, and 4/5-scale. Since complex patches are hard to find thier proper self-examples, their self-examples need to be explored on similar-scale LR images. On the other hand, for flat patches having low edge strength no processing is more promising.

2. 2 Self-similarity-based high frequency synthesis

Let I_{D_α} be the down-scaled version of an input image I according to the selected scale α. From I_{D_α}, the high-frequency image is obtained by Eq. (1).

$$I_{D_\alpha,HF}(k,l) = I_{D_\alpha}(k,l) - I_{D_\alpha,LF}(k,l) \quad (1)$$

where (k,l) is the pixel location and $I_{D_\alpha,LF}$ is derived from Eq. (2).

$$I_{D_\alpha,LF}(k,l) = LPF_1 * I_{D_\alpha}(k,l) \quad (2)$$

where LPF_1 indicates a Gaussian kernel with a standard deviation of σ_1.

2. 3 Image registration

As in Fig. 2, image registration is performed between I and I_{D_α}. Because they have different bandwidth, we need to apply different LPFs to I and I_{D_α} prior to block matching. So, the input image is low-pass-filtered by Gaussian LPF_2 whose standard deviation is σ_2. Hence, I_{LF} is obtained.

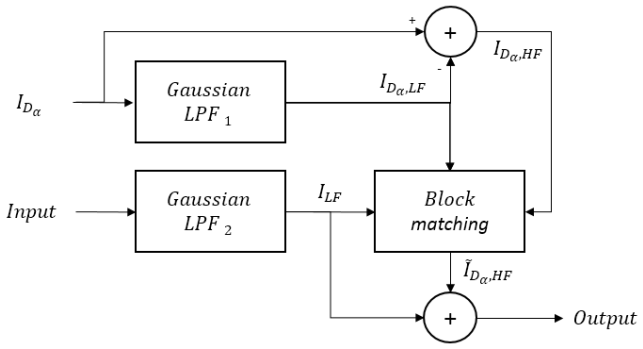

Figure 2. Image registration

Block matching to find the best self-example is performed between I_{LF} and $I_{D_\alpha,LF}$. The search range is set to ± 2 horizontally and vertically. Finally, the output image is obtained by Eq. (3).

$$O(i,j) = I_{LF}(i,j) + \tilde{I}_{D_\alpha,HF}(i,j) \quad (3)$$

where $\tilde{I}_{D_\alpha,HF}$ indicates the selected high-frequency patch via the block matching, and (i,j) is the pixel location of the output image.

3. Experimetal Results

For performance evaluation, 10 IR images were employed. Their size is 320x240, and patch size is 5x5. Four thresholds for classification, i.e., T_0, T_1, T_2, and T_3 are empirically set to 0.1, 0.25, 0.7, and 0.9, respectively. Also, σ_1 and σ_2 for Gaussian LPF are set to 0.6 and 0.8. We compared the proposed algorithm with two blind deblur algorithms [7] and [8].

Fig. 3 shows that the proposed algorithm provides visually better result than two deblur algorithms. While two deblur algorithms suffer from halo artifacts, the proposed algorithm accomplishes high definition without artifacts. Table 1 compares the proposed algorithm with the previous works in terms of an objective metric, i.e., JNB [9]. We can find that the proposed algorithm provides higher JNB on average than the comparative methods.

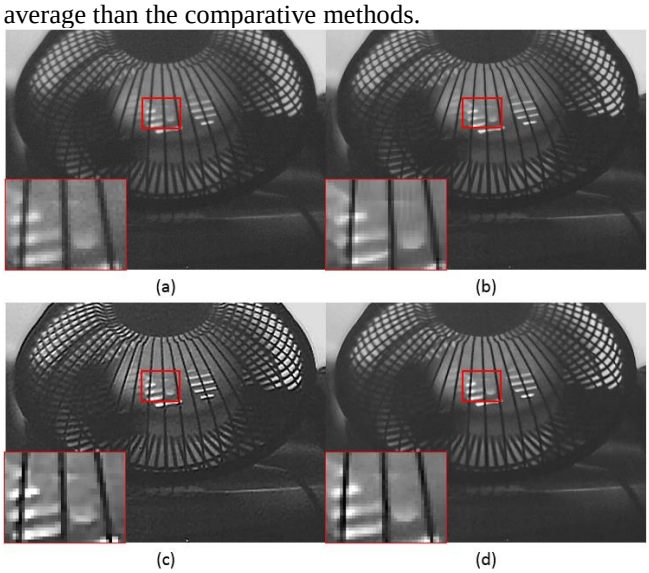

Figure 3. (a) An input image (b) [7] (c) [8] (d) proposed.

Table 1. Just Noticeable Blur (JNB)[10] result

Input	Michaeli[7]	Pan[8]	Ours
1.05229	1.66609	1.57431	1.74273

4. Concluding Remarks

This paper proposed an adaptive multi-scale self-example-based image enhancement algorithm for effective up-scaling of thermal IR images. We proved that the proposed algorithm provides better visual quality than conventional deblur algorithms for IR images without artifacts. If the proposed algorithm is combined with any state-of-the-art super-resolution algorithm and is applied to low-resolution IR sensors, it can successfully replace expensive high-resolution IR sensors.

Acknowledgement

This work was supported by the Inha ICT Corporate-connected R&D Personnel Training Project funded by the Korea Institute for Advancement of Technology (KIAT) [N026700017], and was supported by the Industrial Technology Innovation Program funded by the Ministry of Trade, industry & Energy (MI, Korea) [10052982, Development of multi-angle front camera system for intersection AEB].

References

[1] J. Yang, J. Wright, T. Huang, and Y. Ma, “Image superresolution via sparse representation,” *IEEE Trans. Image Process.*, vol. 19, no. 11, pp. 2861-2873, 2010.

[2] R. Timofte, V. De and L. Van. Gool, “Anchored neighborhood regression for fast example-based super-resolution,” *ICCV*, pp. 1920-1927, 2013.

[3] S. Osher, LI Rudin, “Feature-oriented image enhancement using shock filters,” *SIAM Journal on Numerical Analysis*, vol. 27, no. 4, pp. 919-940, 1990.

[4] A. Polesel, G. Ramponi, V. J. Mathews, “Image enhancement via adaptive unsharp masking,”, *IEEE Trans. Image Process.*, vol. 9, no. 3, pp. 505-510, 2000.

[5] L. Thomas, C. Carsten, D. Oliver, “Image enhancement by unsharp masking the depth buffer,” *ACM Transactions on Graphics (TOG)*, vol. 25, no. 3, pp. 1206-1213, July 2006.

[6] L. Xu, S. Zheng, J. Jia, “Unnatural L0 sparse representation for natural image deblurring,” *IEEE Conference on Computer Vision and Pattern Recognition (CVPR)*, 2013.

[7] T. Michaeli, M. Irani, “Blind deblurring using internal patch recurrence,” *ECCV*, pp. 783-798, 2014.

[8] J. Pan, Z. Hu, Z. Su, M. Yang, “Deblurring text images via L0-regularized intensity and gradient prior,” *IEEE Conference on Computer Vision and Pattern Recognition (CVPR)*, pp. 2901-2908, 2014.

[9] R. Ferzli and L. J. Karam, “A no-reference objective image sharpness metric based on the notion of just noticeable blur (JNB),” *IEEE Trans. Image Process.*, vol. 18, no. 4, pp. 717-728, 2009.