Proceedings of ISAP'04, Sendai, JAPAN

Miniaturization of Microstrip Antenna using Folded Structure

Hee-Moo Heo and Jong-Myung Woo
Dept. of Radio sciences and Engineering, Chungnam National University, Korea
Daejeon, 305-764, Korea
E-mail : hmheo@cnu.ac.kr, jmwoo@cnu.ac.kr

1. Introduction

Recently, there has been an exceeding increase on the miniaturization of radio devices and so the necessity for the miniaturization of antenna is emphasizing more and more.

The microstrip patch antennas (MPA) are widely applied because of their light weight, low volume and low profile characteristics [1]. For the miniaturization of antenna, ceramic material with the dielectric constant 20 ~ 50 is commonly used, but this method has a limit since it shows a low radiation efficiency due to its high dielectric constant.

Therefore, in this paper it is proposed the method of miniaturization by three-dimensional folded structure [2-5]. The foam material with a relative dielectric constant of 1.06 is used as a dielectric substance

First, the antenna that is bent downward both ends of patch's length direction is designed and fabricated. And also, the linear polarization folded microstrip antenna (LPFMA) that is bent once again to inside of the patch and the circular polarization folded microstrip antenna (CPFMA) of structure that is bent to four- directions of patch antenna are designed, fabricated and compared.

2. Linear polarization folded microstrip antenna (LPFMA)

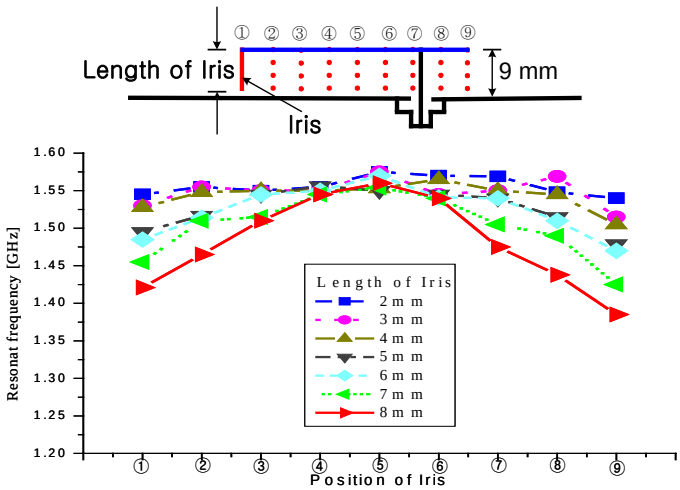

Figure 1. The resonant frequency change by position and length of attached Iris

ISBN: 4-88552-207-2 C3055©IEICE

The miniaturization of microstrip antenna using folded structure was proposed on the basis of an experiment such as Figure 1.

From MPA's patch size (1.575 GHz, length 55 mm × width 90 mm × height 9 mm), iris is attached to the patch horizontally along the resonant length's direction while increasing their length up to 8 mm; by 1 mm. At that time, Figure 1 shows the resonant frequency variation in each position from ① to ⑨. As Figure 1 shows, the resonance frequency is the lowest when the length of iris is 8 mm and the iris is moved to each end-sides of the patch. It is considered that this resonant frequency decline is caused by the increase of the surface current path and perturbation effect of both end-sides of the patch [6].

Thus, two irises placed on both ends are increased their length up to 8 mm by 1mm and the change of the resonance frequency is measured. As a result, resonance frequency is declined up to 1.21 GHz from 1.575GHz as the length of irises is increased.

In this structure, when the antenna is optimized at a frequency 1.575 GHz, the antenna size (length 55 mm × width 90 mm × height 9 mm) is reduced up to 32.5 % as compared with the size of a general MPA to resonant length direction. It is considered that the size reduction of MPA is resulted from the increase of the current path, fringing and perturbation effect by irises of both end-sides of the MPA where the electric field is stronger than that of any other position.

As it is shown in Figure 2, achieving more effective miniaturization, the lower part of two irises is outstretched toward a center of the antenna. The Figure shows that two bottoms outstretched from 1 mm up to 27mm by 1mm, the resonant frequency decreases largely from 1.575 GHz to 715 MHz.

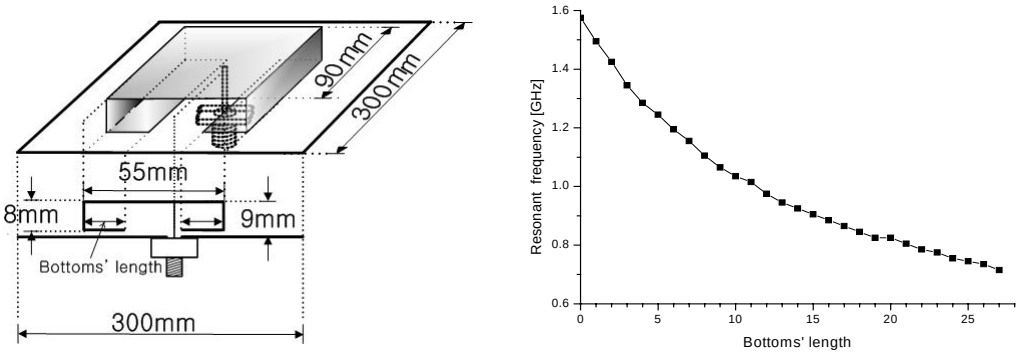

a. Structure b. Resonant frequency change

Figure 2. The resonant frequency change by outstretching of bottoms' length

When the lengths of two bottoms are 27 mm, resonance frequency is 860 MHz (54.6 %) reduced; from 1.575 GHz to 715 MHz.

When this antenna is optimized by same structure, the antenna size (length 21 mm × width 90 mm × height 9 mm) has a 73.6 % reduction in the visible resonant length, and return loss is -25.9 dB in

designed frequency. This antenna has a gain 5.12 dBd, -10 dB bandwidth is 64 MHz (4 %) and the HPBWs in the E-plane and H-plane are each 151˚, 79.2˚.

The final designed LPFMA's structure and radiation pattern are shown in figure 3.

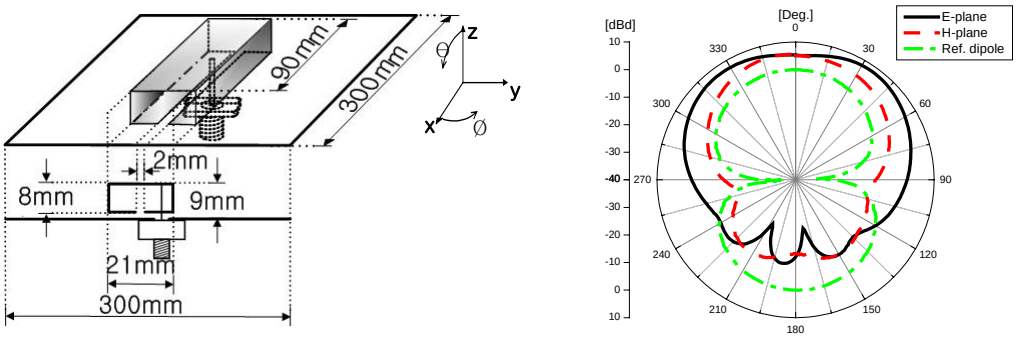

a. Structure b. Radiation pattern

Figure 3. The LPFMA's structure and radiation pattern

3. Circular polarization folded microstrip antenna (CPFMA)

In this method, circular polarization folded microstrip antenna (CPFMA) is designed and fabricated (at 1.575 GHz).

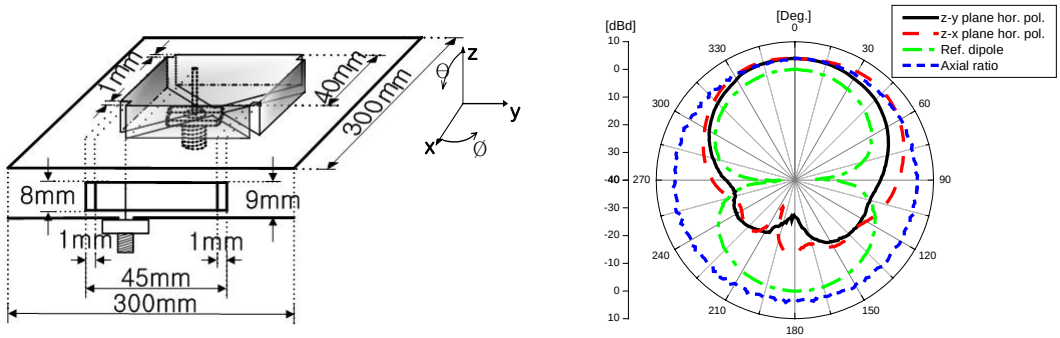

a. Structure b. Radiation pattern

Figure 4. The LPFMA's structure and radiation pattern

To make the most miniaturization of antenna, the triangle shaped bottoms of antenna are outstretched toward a center in four directions. The height from top to ground is 9 mm, and the height from bottom to ground is 1 mm. The antenna size (40 mm × 45 mm × height 9 mm) is reduced by 72.5 % than the plane-type MPA (76 mm × 83 mm × height 9 mm), and -10 dB bandwidth of the return loss is 84 MHz (5.3%) at a designed frequency of 1.575 GHz, and the gain is 3.96 dBd. HPBW is 80.6˚ in the horizontal polarization of the z-x plane, and it is 82.1˚ in the horizontal polarization in the z-y plane.

For the clear comparison, both LPFMA and CPFMA are compared with the plane type MPA, and all the characteristics are listed in Table 1.

Table 1. the characteristics of MPA and FMA

		General MPA		FMA	
		Linear polarization	Circular polarization	LPFMA	CPFMA
Designed frequency		1.575 GHz			
Size[mm×mm]		81.5×90	76×83	21×90	40×45
Return loss		-28.3	-10.1	-27	-12.1
-10 dB Bandwidth(MHz)		87(%)	85(%)	64(%)	84(%)
Gain(dBd)		8	4.2	5.12	3.96
-3 dB Beamwidth (Deg.)	E-plane / z-x plane	E-plane	z-x plane (Hor. pol.)	E-plane	z-x plane (Hor. pol.)
		57.6	56.2	151	80.6
	H-plane / z-y plane	H-plane	z-y plane (Hor. pol.)	H-plane	z-y plane (Hor. pol.)
		67.7	66.2	79.2	82.1
Axial ratio(dB)		-	2.8	-	1.2
2 dB axial ratio bandwidth(MHz)		-	25	-	25

4. Conclusions

In order to miniaturize the rectangular MPA (1.575 GHz), we dropped bending both end-sides of the MPA and folded to antenna center part again. The LPFMA has a 73.6 % reduction in the visible resonant length, and the CPFMA has a 72.5 % reduction in the visible size.

It is expected that the similar reduction as above is gained when a dielectric substance, like ceramic which has a high dielectric constant, is adopted in the designed structure. Therefore, it has been confirmed that the FMA is appropriate in miniaturization of microstrip antenna while it is keeping the fringing effect.

Acknowledgement

This work was supported by grant NO. R01-2003-000-10880-0 from the Basic Research Program of Korea Science & Engineering Foundation.

References

[1] BALANIS C.A, *Antenna theory analysis and design*, John Wiley, New York, Chap. 14, 1997

[2] S. M. Lee, J. M. Woo, M. R. Ryu, and H. C. Shin, “Corrugated circular microstrip patch antennas for miniaturization”, *Electron. Lett*.,38,(14),pp.262-263,2002

[3] M. H. Song, and J. M. Woo, “Miniaturization of microstrip patch antenna using perturbation of radiating slot”, *Electron. Lett*.,39,(6),pp.417-419,2003

[4] J. S. Seo, and J. M. Woo, “A Study on the Microstrip Patch Antenna Miniaturization Using the Effects of Perturbation and iris”, APMC’03.,pp.1233-1236,2003

[5] J. M. Lee, and J. M. Woo, “Miniaturization of 3-dimensional Microstrip Patch Antenna”, APMC’03.,pp.1237-1240,2003

[6] ROGER F. H, *Time-Harmonic Electromagnetic Fields*, Wiley-interscience, Chap. 7, 2001