RADIATION PROPERTIES OF TAPERED SLOT ANTENNAS USING AN ORTHOGONAL FEEDING TECHNIQUE

Misao HANEISHI, Takuya KOJIMA, Yosuke OKAZAKI, Nobuo ONAI
Faculty of Engineering, Saitama University
255 Shimookubo, Urawa 338-8570, Japan
E-mail: haneishi@ees.saitama-u.ac.jp

1. Introduction

A tapered slot antenna (TSA) has been investigated by many researchers [1]-[4], because a TSA has several advantages such as high gain, wide bandwidth and simple configuration.

Recently, a TSA using an orthogonal feeding technique (O-TSA) has been proposed as a useful element antenna for a TSA array [5]. This type of antenna is constructed in such a way that the TSA element is set perpendicular to the substrate for a feeding network, as shown in Figure 1. An array antenna composed of these newly designed O-TSA elements enables the realization of a simple feeding system for a large-scale TSA array, as shown in Figure 2.

The O-TSA element proposed in reference [5] is, however, fed by a microstrip line, as shown in Figure 1(b-2). It is thought that an O-TSA element fed by a microstrip line will show high cross-polarization characteristics because of unwanted radiation from its feeding system. Therefore, new types of O-TSA elements, in which the feeding systems are constructed by a coplanar waveguide (CPW) or a triplate-line, are proposed here.

The feeding systems for the proposed O-TSA elements are shown in Figures 1 (b-1) and (b-3).

In order to verify the performances of these antennas, some O-TSA samples were constructed and tested at the SHF-band. The experimental results showed that the test antennas performed well in terms of both radiation pattern and return-loss characteristics. A basic design technique for and the radiation properties of these new types of O-TSA elements are presented here.

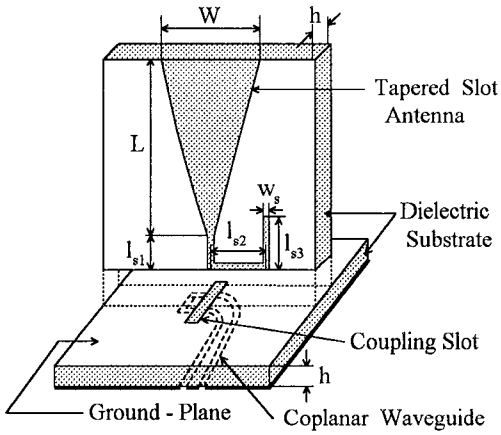

$L=1.0\lambda_0, W=0.4\lambda_0, h=1.2mm, l_{s1}=5.0mm, l_{s2}=6.0mm, l_{s3}=7.0mm, w_s=0.5mm, f_0=10.0[GHz], \varepsilon_r=2.6, \tan\delta=1.8\times10^{-3}$

(a) Basic configuration

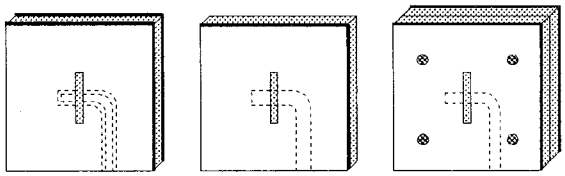

(b-1) Grounded - CPW
(b-2) Microstrip - line
(b-3) Triplate - line

(b) Various types of feeding system

Fig.1 Basic configuration of a tapered slot antenna using an orthogonal feeding techniques

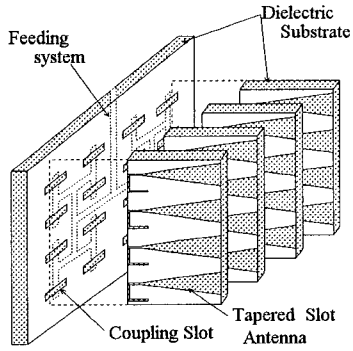

Fig.2 Basic configuration of an array antenna composed of tapered slot antenna elements

2. O-TSA element fed by a G-CPW

(2-1) Basic configuration of the test antenna

A coplanar waveguide (CPW) has recently been used as a useful feeding system for a planar antenna [6], since it has low radiation-loss characteristics and allows the realization of series or parallel connection of MMIC devices without through holes. An O-TSA element fed by a grounded-CPW (G-CPW) is proposed here.

The basic configuration of the O-TSA element is shown in Figure 1. As can be seen in the figure, the TSA element is printed on one side of a dielectric substrate, and its feeding system consists of a G-CPW[7] having a characteristic impedance of 50 [ohm]. The TSA element is coupled electromagnetically via a coupling slot to a feeding system. Impedance matching between the TSA element and the feeding system of this antenna was achieved by controlling the length of open stubs such as l_{s2} and l_{s3}. The optimum geometrical parameters of the test–TSA were determined experimentally, and these parameters are shown in Figure 1. The test O-TSA elements were made of Teflon fiberglass substrate ($\varepsilon_r = 2.6$, $\tan\delta = 0.0018$, h=1.2[mm]).

(2-2) Radiation properties of the test antenna

Figure 3 shows the return-loss characteristics of the O-TSA element fed by a G-CPW. As can be seen in the figure, a broadband return-loss was achieved over the design frequency. Radiation patterns on E- and H-planes of the O-TSA at 10.0 GHz are shown in Figure 4(a) and (b), respectively. Symmetrical radiation patterns were achieved for the test antenna. The cross-polarization levels of the antenna were suppressed to below -25 dB in the boresight direction. The gain characteristics of the test antenna revealed high performance in design frequency. The experimental results confirmed high performances in both radiation patterns and return-loss characteristics.

3. O-TSA element fed by a triplate-line

(3-1) Basic configuration of the test antenna

A TSA element fed by a triplate-line has a low cross-polarization [4], since the antenna is fed by a center conductor of the shielded triplate-line to suppress the influence of unwanted radiation from its feeding system.

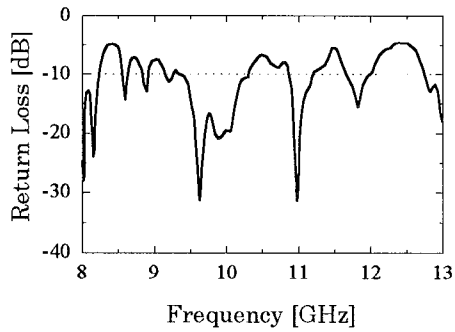

Fig.3 Return loss characteristics of a test antenna fed by grounded - CPW

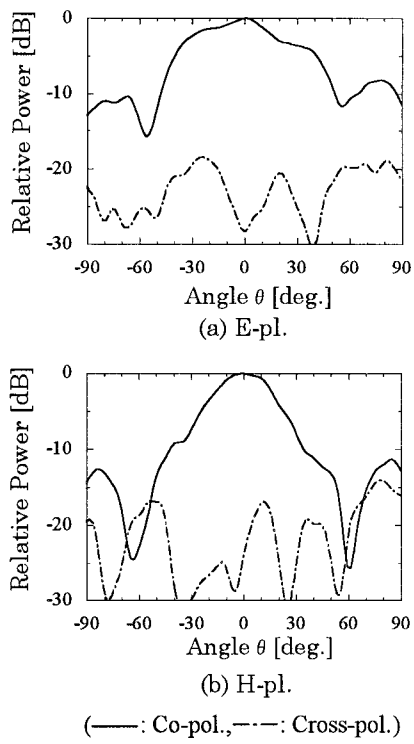

Fig.4 Radiation patterns of a test antenna

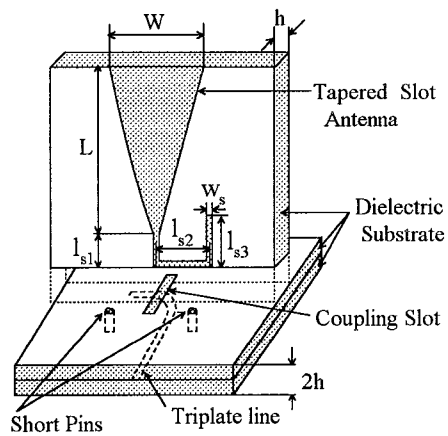

$L=1.0\lambda_0, W=0.4\lambda_0, h=1.2mm, l_{s1}=5.0mm, l_{s2}=6.0mm, l_{s2}=7.0mm, w_s=0.5mm, f_0=10.0[GHz], \varepsilon_r=2.6, \tan\delta=1.8\times10^{-3}$

Fig.5 Basic configuration of a test antenna fed by a triplate - line

The basic configuration and radiation properties of an O-TSA element fed by a triplate-line are presented here. The basic configuration of the O-TSA element is shown in Figure 5. As can be seen in the figure, the TSA element is printed on the dielectric substrate, and its feeding system consists of a shielded triplate-line with a characteristic impedance of 50 [ohm]. The TSA element is coupled electromagnetically via a coupling slot with short pins to a triplate-type feeding system. The short pins in the test antenna are set so as to suppress the parallel plate mode (TEM-mode) excited in the feeding system, and the intervals between the short pins are also set to 20 [mm] in this antenna. Impedance matching between the TSA element and the feeding system of the test antenna was also achieved by controlling the length of the open stubs in the transition. The test antennas were also made of a usual Teflon fiberglass substrate, and the geometrical parameters of the antenna are shown in Figure 5.

(3-2) Radiation properties of the test antenna

Figure 6 shows the return-loss characteristics of the O-TSA element fed by a triplate-line. As can be seen in the figure, a broadband return-loss was also achieved in this test antenna. Radiation patterns on the E- and H-planes of the test antenna at 10.0 GHz are shown in Figure 7(a) and (b), respectively. Symmetrical radiation patterns were also achieved for the test antenna. The cross-polarization levels in the boresight direction were less than −25 dB for the test antenna. The gain at 10 GHz was about 8 dBi in this antenna. The experimental results demonstrated that the test antenna performed well in terms of both radiation pattern and return-loss characteristics.

4. O-TSA element using a dual feeding technique

(4-1) Basic configuration of the test antenna

Figure 8 shows the new type of O-TSA element using a dual feeding technique. As can be seen in the figure, the two O-TSA elements in this dual feeding system are coupled electro-magnetically via one coupling slot to the feeding line. The feeding system of this newly designed O-TSA element was constructed by using a micostrip line, as shown in Figure 1(b-2). Impedance matching between the dual TSA

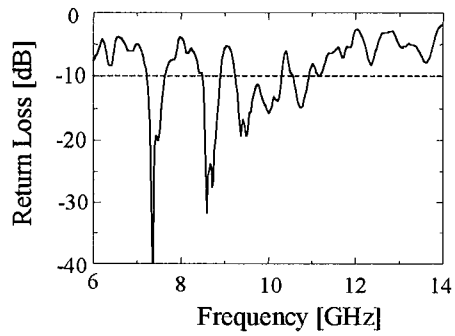

Fig.6 Return - loss characteristics of a test antenna fed by a triplate - line

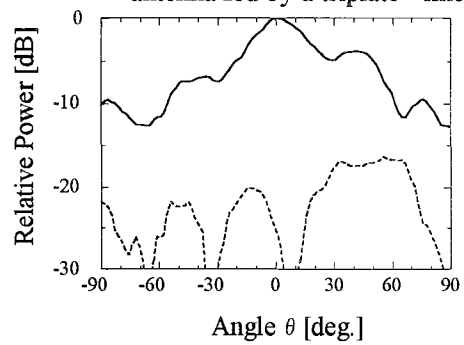

(a) E-pl.

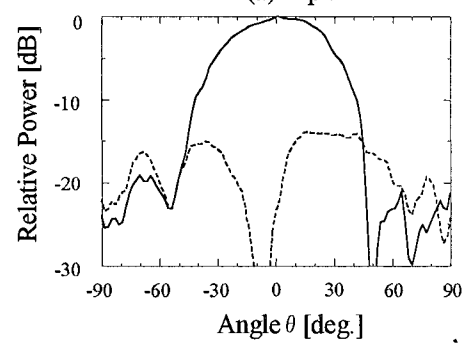

(b) H-pl.

(——: Co-pol.,----: Cross-pol.)

Fig.7 Radiation patterns of a test antenna

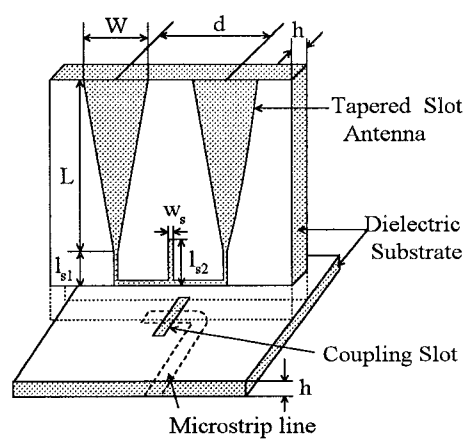

$L=1.0\lambda_0$, $W=0.4\lambda_0$, $d=0.7\lambda_0$, $h=1.2$mm, $l_{s1}=5.0$mm, $l_{s2}=10.0$ mm, $w_s=0.5$mm, $f_0=10.0$[GHz], $\varepsilon_r=2.6$, $\tan\delta=1.8\times10^{-3}$

Fig.8 Basic configuration of a test antenna using a dual feeding technique

element and the feeding system was achieved by controlling the length of open stub (l_{s2}) in the transition. The array antenna using these dual O–TSA elements enables the realization of a simple feeding system for a large-scale TSA array.

The optimum geometrical parameters were determined experimentally, and these parameters for a test antenna are shown in Figure 8. The antennas were made of a usual Teflon fiberglass substrate.

(4-2) Radiation properties of the test antenna

Figure 9 shows the return-loss characteristics of an O-TSA element using a dual feeding technique. As can be seen in the figure, a broadband return-loss was achieved in the test antenna. Radiation patterns on the E- and H-planes of the test antenna at 10 GHz are shown in Figures 10(a) and (b), respectively. Symmetrical radiation patterns were obtained for the test antenna. The E-plane pattern of this antenna shows a sharp beam due to the effect of the array factor for dual TSA elements. The cross-polarization levels of the antenna were suppressed to below –25 dB in the boresight direction. The peak gain was about 10 dBi in this test antenna.

5. Conclusion:

New types of TSA elements using an orthogonal feeding technique (O-TSA) were proposed. The experimental results confirmed that the proposed O–TSA elements performed well in terms of both radiation pattern and return-loss characteristics.

Therefore, these O-TSA elements are considered to be useful for an element antenna for a large-scale TSA array.

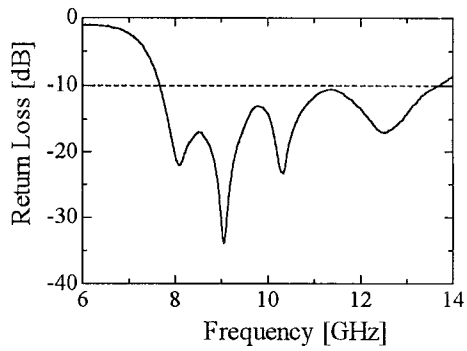

Fig.9 Return - loss characteristics of a test antenna using a dual feeding technique

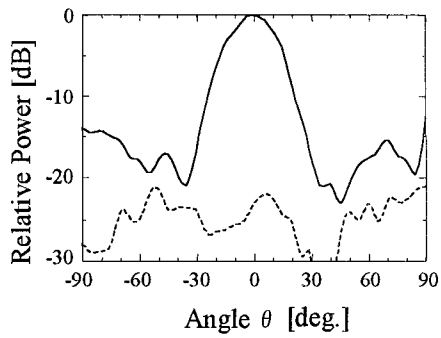

(a) E-pl.

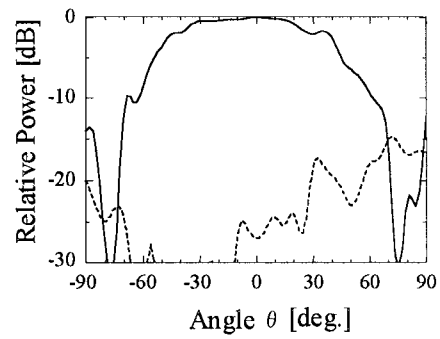

(b) H-pl.

(——: Co-pol.,----: Cross-pol.)

Fig.10 Radiation patterns of a test antenna

[REFERENCES]

[1] R.Janaswamy and D.H.Schaubert:" Analysis of the tapered slot antenna", IEEE Trans. AP-35, pp. 1058-1065, 1987.

[2] P.J.Gibson:" The Vivaldi aerial", Proc. of European Microwave Conf., pp.101-105, 1979.

[3] D.H.Schaubert,J.A.Das, M.E.Cooley andN.E.Buris:2 Moment method analysis of infinite Stripline-fed TSA with a ground plane", IEEE Trans. AP-42, pp.1161-1166, 1994.

[4] H.Iizuka and M.Haneishi:" Radiation properties of a triplate-type tapered slot antenna and its array", IEEE AP-S, Int. Smp. Digest, pp.1926-1919, 1996.

[5] R.Q.Lee and R.N.Simons:" Orthogonal feeding techniques for tapered slot antennas", IEEE AP-S, Int. Smp. Digest, pp.1172-1175, 1998.

[6] Y.Kamimura and H.Haneishi:" Radiation properties of a microstrip antenna fed by a coplanar waveguide", Proc. of ISAP. pp. 529- 532,1996.

[7] G.Gione and C.Nardi:" Parameters of CPW with a lower grounded plane",Electron. Lett.,Vol-19, No.18, pp.734-735,1983.