A simple Two-Transistor Chaos Generator Based On A Resistor-Capacitor Phase Shift Oscillator

Lars Keuninckx, Guy Van der Sande and Jan Danckaert

Applied Physics Group (APHY), Vrije Universiteit Brussel,
Pleinlaan 2, 1050 Elsene, Belgium
Email: lars.keuninckx@vub.ac.be, guy.van.der.sande@vub.ac.be, jan.danckaert@vub.ac.be

Abstract—We added a small subcircuit to an otherwise standard one-transistor self-biasing resistor-capacitor (RC) phase-shift oscillator to induce chaotic oscillations in four dimensions. The final circuit that we have designed uses only two transistors, no inductors, and is powered by a single supply voltage. As such it is an attractive and low-cost source of chaotic oscillations for many applications. We show that the qualitative behaviour of the circuit is captured using a simplified piecewise linear transistor model. Our analysis of this model shows the chaos to stem from hysteretic jumps between unstable equilibria around which growing oscillations exist.

1. Introduction

Many well known oscillator circuits have been modified to produce chaos since the first autonomous chaotic circuit was developed by Chua [1]. Often chaos is induced by the addition of an extra energy storage element such at the right spot in the circuit, thereby adding a dimension to a predominantly two-dimensional limit-cycle oscillator. In some circuits, for example the Collpits oscillator [2], a chaotic regime is already present for certain values of the components,

In reference [3] Elwakil and Kennedy conjecture that every autonomous chaotic oscillator contains a core sinusoidal or relaxation oscillator, capable of showing a simple limit cycle. Thus accordingly, one can derive a chaotic oscillator from any sinusoidal or relaxation oscillator, by adding an energy storing element at the right spot in the circuit. Based on this conjecture we set out to modify the well known sinusoidal one-transistor RC phase shift oscillator as described in ref. [4] such that it produces chaotic signals. Our choice was motivated by the simplicity of the oscillator, since it is one of the first oscillators students in electrical engineering are made familiar with. From a practical point of view, oscillators using only active components plus resistors and capacitors are preferable over those employing also inductors, the latter being less straightforward to integrate. Also, the frequency range of an inductorless oscillator is scalable, by changing the capacitor values.

The phase shift oscillator has been used before as a basis for a chaotic oscillator, for example in ref. [5] where the amplifier model is a piecewise continuous function built using an operational amplifier and diodes. In contrast, we add a small one-transistor subcircuit which directly interacts with the RC-ladder itself, thus creating, as we show further on, an extra unstable fixed point around which oscillations exist. The attractiveness of the resulting circuit lies in its simplicity and low parts count. No specialized components such as dedicated multipliers are needed. Neither the component values nor the supply voltage are critical.

In the next sections the circuit is introduced and experimental results are discussed. We introduce a simplified piecewise-linear model of the circuit. A partial analysis on this simplified model hints that the chaos stems from a new bistability that is introduced by the add-on circuit.

that is present in the circuit.

2. The circuit and experimental results

Figure 1 shows the circuit that we designed, which consists of a standard single-supply RC phaseshift oscillator with a subcircuit -inside the dashed line- interacting directly with the RC-ladder. Since there is a direct current path from collector to base of Q_1, the circuit is self biasing.

The following component values are used: $R = 10\ \mathrm{k\Omega}$, $R_1 = 5\ \mathrm{k\Omega}$, $R_2 = 15\ \mathrm{k\Omega}$, $R_3 = 30\ \mathrm{k\Omega}$, $C = 1\ \mathrm{nF}$, $C_2 = 360\ \mathrm{pF}$. The transistors Q_1 and Q_2 are of the type BC547C although this is not critical. Both the first resistor of the RC-ladder and the collector resistor of Q_1, have been chosen equal to $1/2R$. The subcircuit consisting of Q_2, R_2, R_3, R_4 and C_2 is responsible for the chaotic behaviour. As will be shown further on, the components within the box add new equilibria, In both equilibria Q_1 is biased as an active amplifier, enabling oscillations. It is clear that for low R_4 or low V_p transistor Q_2 will not conduct and the circuit reduces to the unmodified phase shift oscillator. The base oscillation frequency in the chaotic operating regime for $R_4 = 44\ \mathrm{k\Omega}$, $V_p = 5$ V is approximately 44 kHz. The capacitors can be scaled to reach other frequencies. The time trace of v_{CE1}, figure 2, shows that the dynamics consist of growing oscillations in between jumps between two states of high and low average voltage of the collector of Q_1. Note that the collector of Q_2 shows an almost binary distribution in this regime. Figure 3 shows an oscilloscope picture of the attractor projection v_{CE1} vs. v_{CE2} for $R_4 = 44\ \mathrm{k\Omega}$ and $V_p = 5$ V, from which the bistable oscillations around two

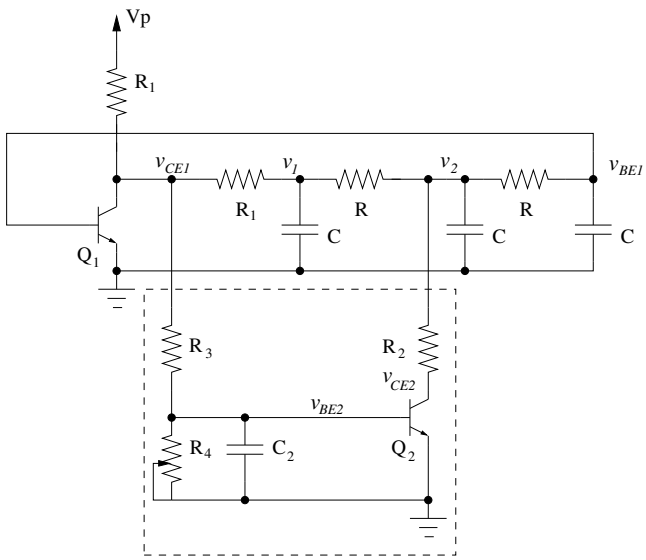

Figure 1: *A two-transistor chaotic RC phase shift oscillator. See text for component values. The subcircuit within the dashed line causes the chaotic operation.*

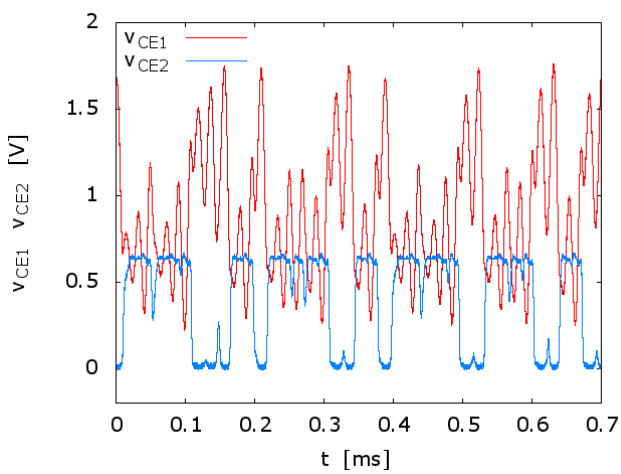

Figure 2: *Measurements of v_{CE1} (red) and v_{CE2} (blue) for $R_4 = 44$ kΩ, $V_p = 5$ V, other component values as stated in the text. The collector voltage of Q_1 shows bistable oscillations. In contrast, the collector voltage of Q_2 is close to binary distributed with sharp jumps between two states.*

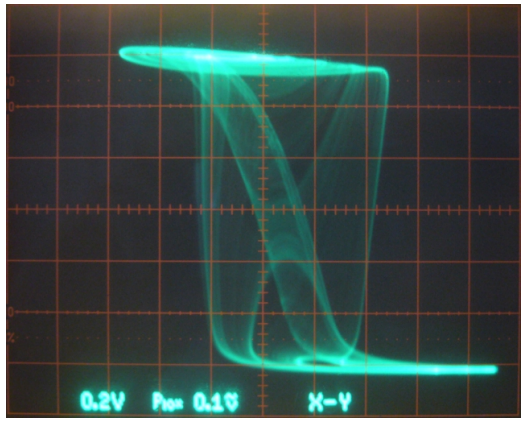

Figure 3: *Attractor projection from the circuit for $R_4 = 44$ kΩ, $V_p = 5$ V. Horizontal: v_{CE1}, 0.2 V/division, vertical: v_{CE2}, 0.1 V/division.*

unstable equilibria are clearly visible.

3. Simplified Model and Analysis

In this section we partially analyse a simplified model and show that the circuit can be understood as a Schmitt-trigger combined with an oscillator. Removing capacitors C from figure 1 such that C_2 is the only energy-storing element, yields a one-dimensional two-transistor circuit, in which the transistor configuration is quite reminiscent of an Eccles-Jordan trigger circuit. The fixed points of this one dimensional circuit are the same as the fixed points of the original four dimensional circuit. Therefore it makes sense to analyze the fixed points of this one-dimensional circuit first. Often when a circuit shows bistability, at least in one of the states the active components are either saturated or non conducting such that there is no gain available to support oscillation. Here transistor Q_1 has gain in both states. A simplified model can be derived, that has shown to still capture the dynamics qualitatively. First, the base currents $i_{B1,2}$ are asumed to be of negligible influence. Second, we assume the current through R_3 does not load the collector of Q_1 down very much. Under these assumptions, $i_{B1,2} = 0$, $R_3 \gg R_1, R$, the system is adequately presented by:

$$
\begin{aligned}
RC\frac{dv_1}{dt} &= -v_1\left(1+\frac{R}{2R_1}\right) + v_2 + V_p\frac{R}{2R_1} - i_{C1}\frac{R}{2}, \\
RC\frac{dv_2}{dt} &= -2v_2 + v_1 + v_{BE1} - i_{C2}R, \\
RC\frac{dv_{BE1}}{dt} &= -v_{BE1} + v_2, \\
R_3C_2\frac{dv_{BE2}}{dt} &= -v_{BE2}\left(1+\frac{R_3}{R_4}\right) + \frac{v_1}{2} + \frac{V_p}{2} - i_{C1}\frac{R_1}{2}. \quad (1)
\end{aligned}
$$

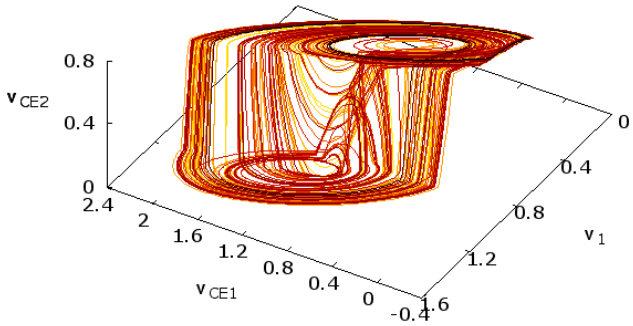

Figure 4: *Numerically obtained attractor of the Eq. 1 for* $R_4 = 44$ kΩ, $V_p = 5$ V.

We use a strongly simplified and static piecewise linear (PWL) transistor model:

$$\begin{aligned} i_{C1} &= \begin{cases} \min\left(G_{M1}\left(v_{BE1} - V_{T1}\right), \frac{V_p + v_1}{R_1}\right) & , v_{BE1} > V_{T1} \\ 0 & , v_{BE1} < V_{T1} \end{cases} \\ i_{C2} &= \begin{cases} \min\left(G_{M2}\left(v_{BE2} - V_{T2}\right), \frac{v_2}{R_2}\right) & , v_{BE2} > V_{T2} \\ 0 & , v_{BE2} < V_{T2}. \end{cases} \end{aligned} \quad (2)$$

This transistor model shows three distinct regions, a cut-off region where $v_{BE} < V_T$, an active region where there is gain, and a saturated region. In this simplified model we set the threshold of conduction voltage $V_{T1,2}$ equal for both transistors at $V_T = 0.6$ V. The collector saturation currents in eq. 2 are chosen such that the collector to emitter voltages do not become negative. We set $G_{M1} = 16$ mA/V and $G_{M2} = 1$ mA/V, corresponding with average transconductances found in the experiments. Figure 4 shows the results for a numerical integration of the previous system. We nondimensionalize the system as follows:

$$\begin{aligned} x &= \frac{v_1 - V_T}{V_T}, y = \frac{v_2 - V_T}{V_T}, z = \frac{v_{BE1} - V_T}{V_T}, \\ u &= \frac{v_{BE2} - V_T}{V_T}, t' = \frac{t}{RC}, \tau = \frac{R_3 C_2}{RC} = 1.08, \\ a &= \frac{V_p}{V_T} = \frac{5}{0.6}, b = 1 + \frac{R_3}{R_4}, \\ \alpha &= G_{M1} R_1 = 80, \beta = G_{M2} R = 10. \end{aligned}$$

This yields:

$$\begin{aligned} \dot{x} &= -2x - 1 + y + a - h_\alpha\left(z, 1 + a + x\right), \\ \dot{y} &= -2y + x + z - h_\beta\left(u, 2/3(y+1)\right), \\ \dot{z} &= -z + y, \\ \tau\dot{u} &= -ub - b + \frac{a}{2} + \frac{1}{2} + \frac{x}{2} - \frac{1}{2} h_\alpha\left(z, 1 + a + x\right). \end{aligned} \quad (3)$$

The function h is defined as:

$$h_\gamma(x, y) = \begin{cases} \min\left(\gamma x, y\right) & , x > 0 \\ 0 & , x \leq 0 \end{cases} \quad (4)$$

Altough the full system is four dimensional, insight about the role of the subcircuit built around transistor Q_2 can be gained by looking at the behavior of the circuit with capacitors C removed. We now show that the subcircuit built around transistor Q_2 adds fixeded points for a range of values of the parameter b such that bistability exists and calculate this range. These fixeded points will then also exist in the full four dimensional system. Setting $\dot{x} = \dot{y} = \dot{z} = 0$ results in expressions for the behaviour of the one-dimensional circuit obtained by removing the capacitors C:

$$\begin{aligned} x &= a - 1 - h_\beta\left(u, \tfrac{2}{3}(y+1)\right) - h_\alpha(z, 1 + a + x), \\ y &= a - 1 - 2h_\beta\left(u, \tfrac{2}{3}(y+1)\right) - h_\alpha(z, 1 + a + x), \\ z &= y, \\ \tau\dot{u} &= -ub - b + \tfrac{a+\alpha}{1+\alpha} + h_\beta\left(u, \tfrac{2}{3}(y+1)\right) \tfrac{3\alpha - 1}{2\alpha + 2}. \end{aligned} \quad (5)$$

It can be shown that for Eq. 5 z always has values such that $h_\alpha(z, 1 + a + x) = \alpha z$ in Eq. 5. Other propositions lead to contradictions. The phase plot of u for several values of b is shown in figure 5. It consists of three distinct straight-line regions:

region 1, $-1 < u < 0$**:**

In this region Q_2 is non-conducting:

$$\tau\dot{u} = -ub - b + \tfrac{a+\alpha}{1+\alpha}. \quad (6)$$

If $b > b_{\text{crit1}} = (a + \alpha)/(1 + \alpha) \approx 1.091$ or $R_4 < 331$ kΩ, there exists a stable fixed point u^*_- given by:

$$\begin{aligned} u^*_- &= -1 + \tfrac{1}{b}\tfrac{a+\alpha}{1+\alpha}, \\ x^*_- &= y^*_- = z^*_- = \tfrac{a-1}{1+\alpha}. \end{aligned} \quad (7)$$

region 2, $0 < u < u_{\text{sat}}$**:**

In this region Q_2 is actively conducting but not saturated. The saturation value does not depend on b:

$$u_{\text{sat}} = \tfrac{1}{\beta}\tfrac{2a+2\alpha}{3\alpha+7} \approx 0.072. \quad (8)$$

The evolution is given by:

$$\tau\dot{u} = -u\left(\tfrac{\beta}{2}\left(\tfrac{3\alpha-1}{\alpha+1}\right) - b\right) - b + \tfrac{a+\alpha}{1+\alpha}, \quad (9)$$

which is an ascending straight line if:

$$b < \tfrac{\beta}{2}\left(\tfrac{3\alpha-1}{2\alpha+2}\right) \approx 14.75. \quad (10)$$

Furthermore if Eq. 9 crosses zero for $u < u_{\text{sat}}$, an unstable equilibrium u^*_0 exists in this region. The condition for which this unstable equilibrium exists is:

$$b < b_{\text{crit2}} = \tfrac{6\beta(a+\alpha)}{2a+2\alpha+3\alpha\beta+7\beta} \approx 2.0025, \quad (11)$$

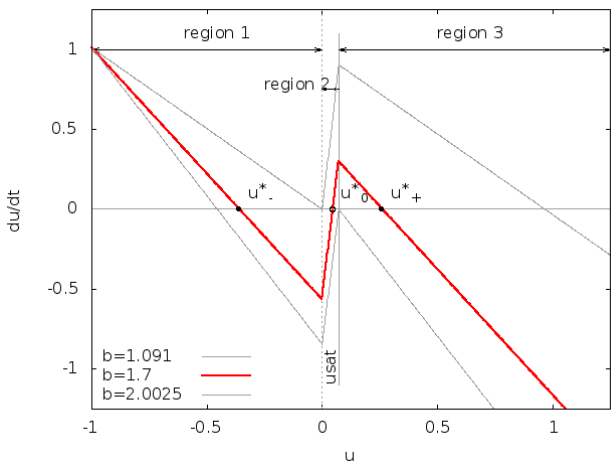

Figure 5: *Phase plot for the one-dimensional circuit obtained by removing capacitors C from the chaotic oscillator. For a range of b values, a bistability exists. The added equilibria then also exist in the full four-dimensional oscillator circuit, leading to chaotic bistable oscillations. The value of* $b = 1.7$*, corresponding to* $R_4 = 44$ kΩ*, is shown in red.*

or $R_4 > 29.9$ kΩ. For $b = 2.0025$, the unstable equilibrium is born together with a stable equilibrium in a 'blue sky' bifurcation. Experimental evidence of was found at this value of R_4, as a point of increased intensity on the oscilloscope display indicated a critical slowing down. The position of this equilibrium for the full four dimensional circuit is given by:

$$\begin{aligned} u_0^* &= \frac{-b(1+\alpha)+a+\alpha}{b(1+\alpha)-\frac{\beta}{2}(3\alpha-1)}, \\ y_0^* &= z_0^* = \frac{1}{1+\alpha}\left(a-1-2\beta u_0^*\right), \\ x_0^* &= y_0^* - \beta u_0^*, \end{aligned} \tag{12}$$

region 3, $u > u_{\mathbf{sat}}$**:**

In this region Q_2 is saturated:

$$\tau\dot{u} = -ub - b + \frac{a+\alpha}{1+\alpha} + \frac{a+\alpha}{3\alpha+7}\frac{3\alpha-1}{1+\alpha}, \tag{13}$$

with a stable equilibrium u_+^* if $b < b_{\text{crit2}}$:

$$u_+^* = -1 + \frac{1}{b}\left(\frac{a+\alpha}{1+\alpha} + \frac{a+\alpha}{3\alpha+7}\frac{3\alpha-1}{1+\alpha}\right). \tag{14}$$

Note that for $u > u_{\text{sat}}$, x, y and z are fixed at:

$$\begin{aligned} x_+^* &= \frac{5a+2\alpha-7}{3\alpha+7}, \\ y_+^* &= z_+^* = \frac{3a-7}{3\alpha+7}. \end{aligned}$$

Note that altough this discussion is only valid for the one-dimensional subcircuit, we remark that the added fixed points are also existent in the full four dimensional circuit, where they result in bistable oscillations as shown by our experiments.

4. Discussion

A simple chaotic oscillator derived from a resistor-capacitor ladder oscillator has been introduced, see fig. 1. The circuit does not need specialty components such as multipliers, is inductorless and operates with a single supply voltage. The base frequency can be chosen by scaling the capacitors. None of the component values are critical. Analysis with a simplified transistor model shows that the addition of the subcircuit consisting of Q_2, $R_{2...4}$ and C_2 to the oscillator enables two fixed points around which oscillations are present if $1.091 = b_{\text{crit1}} < b < 2.0025 = b_{\text{crit2}}$ corresponding to 29.9 kΩ $< R_4 < 331$ kΩ. The dynamics then consist of chaotic jumping between these two states. The above points towards the following 'design guideline', which was constructed in hindsight, for inducing chaos in this type of oscillator:
Starting from a standard oscillator, remove the energy storing elements in such a way that biasing is not influenced, i.e. open the capacitors and short the inductors. Then add a one-dimensional subcircuit such that an extra equilibrium is introduced in such a way that the active elements show sufficient gain for oscillation around both the added and the original equilibrium. Reintroducing the original energy storing elements of the oscillator is then likely to lead to complex dynamics.
The difficulty in applying above guideline in this particular case is that bias levels and gain are not independent. This could be alleviated by interchanging the resistors and capacitors of the RC ladder and providing bias to Q_1 separately. It remains to be tested if this design guideline can be applied succesfully to induce chaos in other types of oscillators.

References

[1] L. O. Chua, T. Matsumoto, M. Komuro, "The Double Scroll", *IEEE Transactions on Circuits and Systems*, August 1985.

[2] M. P. Kennedy, "Chaos in the Colpitts oscillator", *IEEE Transactions on Circuits and Systems*, November 2004.

[3] A. S. Elwakil, M. P. Kennedy, "Chua's Circuit Decomposition: a Systematic Design Approach for Chaotic Oscillators", *Journal of the Franklin Institute*, vol 337, February 2000.

[4] E. L. Ginzton, L. M. Hollingsworth. "The phase shift oscillator", *Proceedings of the Institute of Radio Engineers*, 29, p. 43, 1941.

[5] M. J. Ogorzalek,"Some Properties of a Chaos Generator with RC Ladder Network", *Proc. ECCTD'87*, 2, pp.519-524, 1987.