2009 International Symposium on Nonlinear Theory and its Applications
NOLTA'09, Sapporo, Japan, October 18-21, 2009

Synchronization of broadband chaos in semiconductor lasers with optical injection

Haruka Okumura[1)], Atsushi Uchida[1)], Hiroyuki Someya[2)], Isao Oowada[2)], and Takahiko Kida[2)]

[1)] Department of Information and Computer Sciences, Saitama University,
255 Shimo-Okubo, Sakura-ku, Saitama city, Saitama, 338-8570, Japan
[2)] Department of Electronics and Computer Systems, Takushoku University,
815-1 Tatemachi, Hachioji, Tokyo, 193-0985, Japan
Email: {s09mm309, auchida}@mail.saitama-u.ac.jp

Abstract– We experimentally investigate bandwidth enhancement of chaos in a semiconductor laser (drive laser) subject to optical injection from another chaotic semiconductor laser (injection laser). The bandwidth enhancement is achieved when the optical wavelength of the drive laser is mismatched to that of the injection laser out of the injection locking range. A bandwidth-enhanced chaotic signal of the drive laser is injected into a third semiconductor laser (response laser). Synchronization of bandwidth-enhanced chaos is observed between the drive and response lasers when the optical wavelengths of the drive and response lasers are matched to each other due to the injection locking effect. High quality of synchronization is achieved in the injection locking range.

1. Introduction

Synchronization of chaotic lasers has attracted much interest for applications in optical secure communications and spread-spectrum communications [1-5]. For applications of synchronized laser chaos to secure communications, a chaotic carrier is used to hide a data signal. In this type of application, high-quality synchronization of chaos in the transmitter and receiver lasers is required to recover the hidden data. Recently, high-speed long-distance communication based on chaos synchronization has been demonstrated over a commercial fiber-optic channel [5].

The transmission capacity in chaos communication is limited by the bandwidth of a chaotic carrier since a message is encoded in the chaotic carrier. Bandwidth enhancement of chaos is required for higher-speed chaos communications. Bandwidth-enhanced chaos could be also useful for physical random number generation using chaotic semiconductor lasers [6]. The technique of bandwidth enhancement has been demonstrated by using optical injection [7-11] and optoelectronic feedback [12]. Synchronization of bandwidth-enhanced chaos has been investigated numerically [9]. However, no experimental observation of synchronization of bandwidth-enhanced chaos has been reported. Chaotic signals with higher bandwidth include high-frequency noise components and may become more difficult to obtain synchronization than slow chaotic oscillations.

In this study, we demonstrate bandwidth enhancement of chaos in semiconductor lasers subject to optical injection over 10 GHz. The optical wavelength detuning is precisely controlled to achieve bandwidth enhancement. We observe synchronization of bandwidth-enhanced chaos in one-way coupled semiconductor lasers. We investigate parameter dependence of synchronization quality on the optical wavelength detuning.

2. Experimental setup

Figure 1 shows our experimental setup for the enhancement of the bandwidth of optical chaos and its synchronization. We used three distributed-feedback (DFB) semiconductor lasers (NTT Electronics, NLK1555CCA, the optical wavelength of 1547 nm) developed for optical fiber communications. The three semiconductor lasers were fabricated from the same wafer, so they have similar laser parameter values. One laser was used for an injection laser (called Injection) and the output of Injection laser was used for the enhancement of the second laser (called Drive). The bandwidth-enhanced output of Drive laser was injected into the third laser (called Response) for synchronization. The injection current and the temperature of the semiconductor lasers were adjusted by a current-temperature controller (Newport, 8000-OPT-41-41-41-41). The optical wavelength of the lasers was precisely controlled by the temperature of the laser with a ratio of 0.097 nm/K. The resolution of the temperature control was 0.01 K. The lasing thresholds of the injection current for solitary lasers I_{th} were 8.7 mA (Injection), 7.6 mA (Drive), and 9.2 mA (Response), respectively.

An external mirror was placed in front of the Injection laser at a distance of 1.40 m, corresponding to a feedback delay time (roundtrip) of 9.3 ns, whereas there is no external mirror for Drive and Response lasers. A portion of the laser beam from the Injection laser was fed back to the laser cavity of the Injection to induce chaotic fluctuation of laser output. The feedback power was adjusted by a neutral-density filter (a variable attenuator). The beam from the Injection laser was divided into two beams by a beam splitter and one beam was injected into the Drive laser. Two optical isolators and two half wave

plates were used to achieve one-way coupling. The wavelengths of the Injection and Drive lasers were adjusted in order to generate bandwidth-enhanced chaotic signals in the Drive laser due to the optical injection from the Injection laser. The output of the Drive laser was also injected into the Response laser unidirectionally for the achievement of synchronization. A portion of each laser output was extracted by a beam splitter, injected into a fiber collimator through an optical isolator and propagated through an optical fiber to be detected by a photodetector. The converted electronic signal at the photodetector was amplified by an electronic amplifier and sent to a digital oscilloscope and a radio-frequency (RF) spectrum analyzer to observe temporal dynamics and corresponding RF spectrum, respectively. The optical wavelength of the lasers was measured by an optical spectrum analyzer.

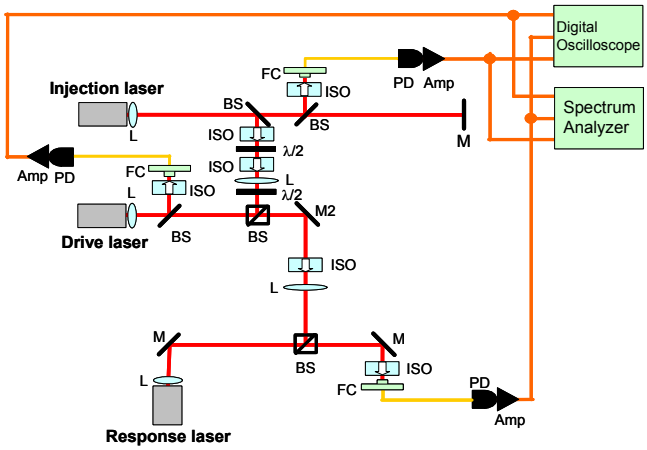

Fig. 1 Experimental setup for synchronization of broadband chaos in semiconductor lasers with optical injection. Amp, electronic amplifier; BS, beam splitter; FC, fiber collimator; ISO, optical isolator; L, lens; λ/2, half wave plate; M, mirror; NDF, neutral density filter; PD, photodetector.

3. Experimental Results

3.1. Bandwidth enhancement of chaos

We set the relaxation oscillation frequencies of 8.0 GHz for the Injection and Drive lasers by adjusting the injection current of the lasers. The injection currents were 44.49 mA (5.1 I_{th}) for the Injection laser and 43.50 mA (5.7 I_{th}) for the Drive laser, respectively. To enhance the bandwidth of chaos, we set the optical wavelengths of the Injection and Drive lasers out of the injection locking range. The existence of the optical frequency detuning can enhance the bandwidth of lasers. We thus set the optical wavelength of 1547.333 nm for the Injection and 1547.418 nm for the Drive by controlling the temperature of the lasers. The optical wavelength detuning was $\Delta\lambda_{DI} = \lambda_{Drive} - \lambda_{Injection} = 0.085$ nm (10.6 GHz in frequency), which was the positive detuning and no injection locking was achieved between the Injection and Drive lasers in this condition.

Figure 2 shows temporal waveforms of the Injection and Drive lasers, and their corresponding RF spectra. Chaotic temporal waveforms of the Injection and Drive lasers are observed as shown in Fig. 2(a). The chaotic oscillation of the Drive laser looks faster than that of the Injection laser. The RF spectra in Fig. 2(b) show that bandwidth enhancement of the Drive laser by the injection of the Injection laser output, since the center frequencies of the Injection and Drive lasers are 8.66 and 12.64 GHz, respectively. We define the bandwidth of the chaotic signals as the range between the DC and the frequency where 80% of the spectrum power is contained within it.

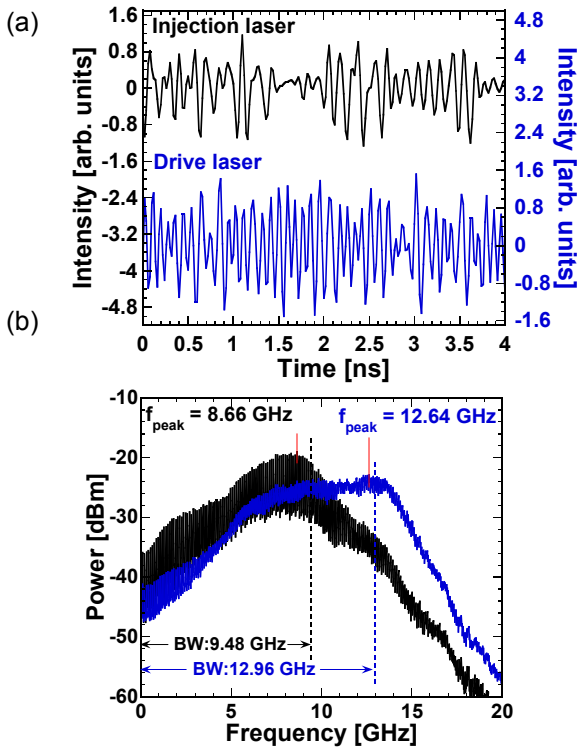

Fig. 2 Experimental result of (a) temporal waveforms and (b) corresponding RF spectra for Injection and Drive lasers.

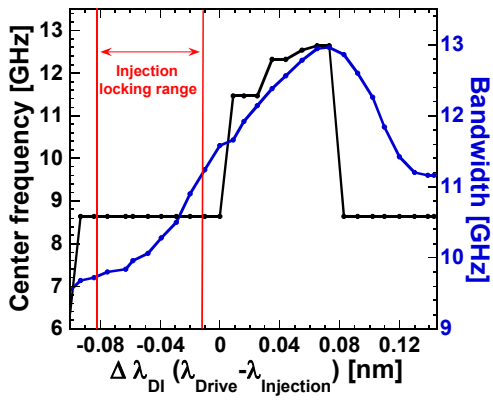

Fig. 3 Experimental result of center frequency and bandwidth as a function of the optical wavelength detuning between the Injection and Drive lasers.

The bandwidths of the Injection and Drive lasers are 9.48 and 12.96 GHz, respectively. The bandwidth enhancement of chaotic signals is achieved experimentally.

We investigate the characteristics of bandwidth enhancement when the optical frequency detuning $\Delta\lambda_{DI}$ is changed. Figure 3 shows the center frequency and the bandwidth of the chaotic Drive laser as a function of optical frequency detuning $\Delta\lambda_{DI}$. Both of the center frequency and bandwidth are increased until $\Delta\lambda_{DI}$ = 0.073 nm with increase of $\Delta\lambda$. The center frequency and the bandwidth are 12.64 and 12.94 GHz at $\Delta\lambda_{DI}$ = 0.073 nm. Note that the bandwidth enhancement is achieved out of the injection locking range, where the two optical frequencies are locked and the bandwidth does not change, as shown in Fig. 3. Therefore it is important to set the positive optical frequency detuning ($\Delta\lambda_{DI}$ > 0 nm) for the bandwidth enhancement. Please note that the limitation of the bandwidth enhancement at around 12 GHz results from the bandwidth limitation of the photoreceivers and the digital oscilloscope. In principle it is possible to enhance the bandwidth further by using faster detectors and oscilloscopes.

3.2 Synchronization of bandwidth-enhanced chaos

We investigate synchronization of bandwidth-enhanced chaos between the Drive and Response lasers. We set the relaxation oscillation frequencies of 3.0 GHz for the Response laser. The injection current of the Response laser was 13.84 mA (1.5 I_{th}). A bandwidth-enhanced chaotic signal from the Drive laser was injected into the Response laser unidirectionally. The optical wavelength was set to 1547.476 nm for the Drive laser in the presence of the injection signal from the Injection laser and 1547.264 nm for the solitary Response laser. The optical wavelength detuning between the Drive and Response lasers was $\Delta\lambda_{RD} = \lambda_{Response} - \lambda_{Drive}$ = -0.212 nm (-26.5 GHz in frequency). We set the negative detuning so that injection locking is achieved between the Drive and Response lasers for synchronization.

Figure 4 shows the temporal waveforms, the cross correlation, the RF spectra, and the optical spectra of the Drive and Response lasers. The bandwidth-enhanced chaotic signals are synchronized between the Drive and Response lasers as shown in Figs. 4(a) and 4(b). The center frequencies of the two lasers are very similar (12.22 and 12.12 GHz for the Drive and Response, respectively). The bandwidth of the Response laser of 12.16 GHz is also similar to that of the Drive laser of 12.28 GHz. The optical spectra of the Drive and Response lasers match very well, whereas the optical spectrum of the Injection laser is different as shown in Fig. 4(d). Therefore, we found that the synchronization of bandwidth-enhanced chaos can be achieved by using injection locking, whereas the optical wavelengths need to set out of the injection locking range for the bandwidth enhancement of chaos between the Injection and Drive lasers.

We quantitatively define the quality of synchronization as the cross correlation between two temporal waveforms normalized by the product of their standard deviations: i.e.,

$$C = \frac{\langle (I_1 - \bar{I}_1)(I_2 - \bar{I}_2) \rangle}{\sigma_1 \sigma_2} \qquad (1)$$

where $I_{1,2}$ are the total intensities of the two temporal waveforms, $\bar{I}_{1,2}$ are their mean values, and $\sigma_{1,2}$ are their standard deviations. The angle brackets denote time averaging. The best synchronization is obtained at cross-correlation coefficient of C = 1. The cross correlation value of Fig. 4(b) is 0.954 and high-quality of synchronization is achieved in Fig. 4.

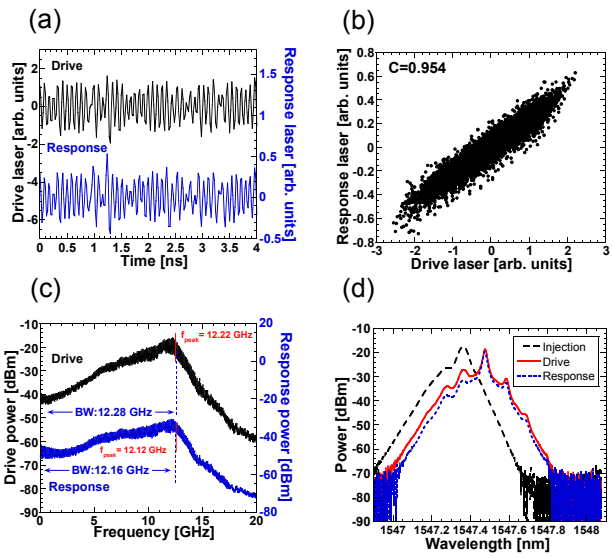

Fig. 4 Experimental result of (a) temporal waveforms, (b) correlation plot, (c) RF spectra, and (d) optical spectra for the Drive and Response lasers.

3.3 Parameter dependence

We investigate the parameter dependence of chaos synchronization. We change the optical wavelength detuning. Figure 5(a) shows the cross correlation between the Drive and Response lasers as a function of the optical wavelength detuning between the Drive and Response $\Delta\lambda_{RD}$. The maximum cross correlation of 0.950 is obtained at $\Delta\lambda_{RD}$ = -0.215 nm. The cross correlation is larger than 0.90 in the range of -0.244 nm < $\Delta\lambda_{RD}$ < -0.047 nm, corresponding to the injection locking range. Therefore, the region for good chaos synchronization is almost equivalent of the injection locking range.

Figure 5(b) shows the cross correlation between the Drive and Response lasers as a function of the optical wavelength detuning between the Injection and Drive $\Delta\lambda_{DI}$. The bandwidth of the chaos of the Drive laser is changed by $\Delta\lambda_{DI}$, so the bandwidths of the Drive an Response lasers are also plotted in Fig. 5(b). The cross correlation between 0.90 and 0.95 is obtained and high-quality of synchronization is observed in the wide range

of $\Delta\lambda_{DI}$. However, as the bandwidth is increased the cross correlation value is slightly decreased and there is a difference in the bandwidth between the Drive and Response lasers at around $\Delta\lambda_{DI}$ = 0.08 nm. In this region the high frequency component of the Response laser cannot be synchronized with that of the Drive laser, and the degradation of synchronization is observed.

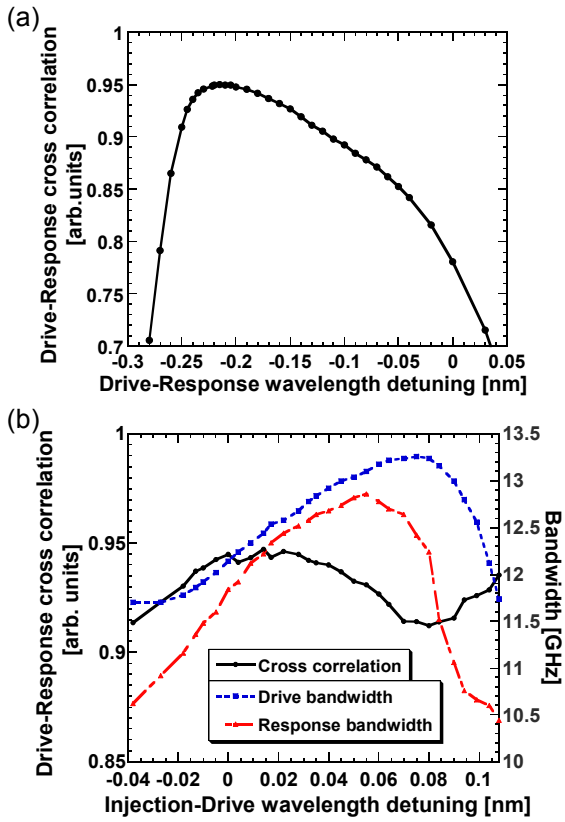

Fig. 5 Experimental result of the cross correlation between the Drive and Response lasers as a function of the optical wavelength detuning (a) between the Drive and Response lasers, and (b) between the Injection and Drive lasers.

4. Conclusion

We have experimentally investigated bandwidth enhancement of chaos in a semiconductor laser (drive laser) subject to optical injection from another chaotic semiconductor laser (injection laser). The bandwidth enhancement is achieved when the optical wavelength of the drive laser is mismatched to that of the injection laser out of the injection locking range. A bandwidth-enhanced chaotic signal of the drive laser is injected into a third semiconductor laser (response laser). Synchronization of bandwidth-enhanced chaos is observed between the drive and response lasers when the optical wavelengths of the drive and response lasers are matched to each other due to the injection locking effect. High quality of synchronization is achieved in the injection locking range.

Acknowledgments

We acknowledges support from TEPCO Research Foundation, JGC-S Scholarship Foundation, and Grants-in-Aid for Young Scientists from the Ministry of Education, Culture, Sports, Science and Technology.

References

[1] G. D. VanWiggeren and R. Roy, *Science* **279,** 1198-1200 (1998).

[2] J.-P. Goedgebuer, L. Larger, and H. Porte, *Phys. Rev. Lett.* **80,** 2249-2252 (1998).

[3] S. Sivaprakasam and K. A. Shore, *Opt. Lett.* **24,** 1200-1202 (1999).

[4] K. Kusumoto and J. Ohtsubo, *Opt. Lett.* **27,** 989-991 (2002).

[5] A. Argyris, D. Syvridis, L. Larger, V. Annovazzi-Lodi, P. Colet, I. Fischer, J. Garcia-Ojalvo, C. R. Mirasso, L. Pesquera, and K. A. Shore, *Nature* **438,** 343-346 (2005).

[6] A. Uchida, K. Amano, M. Inoue, K. Hirano, S. Naito, H. Someya, I. Oowada, T. Kurashige, M. Shiki, S. Yoshimori, K. Yoshimura, and P. Davis, *Nature Photonics* **2,** 728-732 (2008).

[7] T. B. Simpson, J. M. Liu, and A. Gavrielides, *IEEE Photon. Tech. Lett.* **7,** 709-711 (1995).

[8] H. F. Chen, J. M. Liu, and T. B. Simpson, *Opt. Commun.* **173,** 349-355 (2000).

[9] Y. Takiguchi, K. Ohyagi, and J. Ohtsubo, *Opt. Lett.* **28,** 319-321 (2003).

[10] A. Uchida, T. Heil, Y. Liu, P. Davis, and T. Aida, *IEEE J. Quantum Electronics* **39,** 1462-1467 (2003).

[11] A. Wang, Y. Wang, and H. He, *IEEE Photon. Tech. Lett.* **20,** 1633-1635 (2008).

[12] F. Y. Lin and J. M. Liu, *Opt. Commun.* **221,** 173-180 (2003).