Radiated Emission From PLC and Electrical Unbalance of An Artificial Power Distribution Line

Naoto OKA, Akio KONEMORI, Yuichi SASAKI, Hidenobu FUKUSHIMA, Masataka KATO*, Shuichi NITTA**

Mitsubishi Electric Corp. Information Technology R&D Center, *Network Systems Engineering Section
**Salesian polytechnic

Abstract: The relation of radiated emission from PLC, LCL of the artificial power line and electrical unbalance at the time of PLC modem communication is investigated in order to use for development of the PLC modem. In the investigation, radiated emission from PLC is measured by using the artificial power line and the PLC modems winch are in active. And, LCL is measured at the terminal of the artificial power line for connecting the PLC modem. Moreover, electrical unbalance at the time of PLC modem communication is evaluated from current measurement on the power line at which the PLC modem is connected to.

Key words: Power line communication, Longitudinal conversion loss, Electrical unbalance, Radiated emission, Common-mode/Differential mode current

1. Introduction

Power line communication (PLC) applies multiplexing modulation technology or various modulation technologies at the frequency range of 2-30 MHz, and makes the access speed of dozens Mbps possible using a power distribution network as a telecom infrastructure. The experiment that aimed at commercialization is already performed in Europe and U.S.A. Radiated emission from power distribution lines at the time of communication for PLC is deliberated in CISPR/I. And the committee examines the common-mode voltage specification and measurement method of it in order to restrict the emission level [1]. In this examination, the committee studies longitudinal conversion loss (LCL) of the T-shaped impedance stabilization network (T-ISN), which is used for the measurement of the common-mode voltage. The common-mode voltage, or current, is converted from differential-mode signaling of the PLC owing to electrical unbalance, which exists in the PLC system. And, the relation between LCL of the telecommunications line with a differential-mode signal generator and emission from the line was reported [2].

In this paper, the relation of radiated emission from PLC, LCL of the artificial power line and electrical unbalance at the time of PLC modem communication is investigated in order to use for development of the PLC modem.

2. Measurement method

2.1 LCL measurement

The circuit for LCL measurement is shown in Fig.1. LCL is defined as the ratio of the common-mode voltage Vc and the differential-mode voltage Vd that is produced by the Vc. The LCL is shown by eq. (1).

$$LCL = 20\log_{10}\left|\frac{V_c}{V_d}\right| \quad [dB] \qquad (1)$$

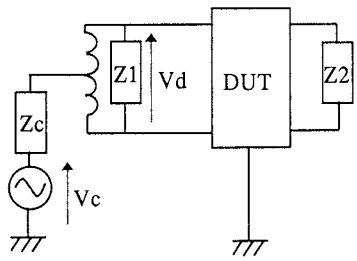

Fig.1 The circuit for LCL measurement. (DUT; Device under test)

In this paper, the LCL probe was used for measurement of LCL at the end of the artificial power line. A circuit diagram of the LCL probe and LCL measurement method using the LCL probe are shown in Fig.2 [3]. In Fig.2, Port "g" is the common-mode input port, ports "e" and "f" are the differential-mode output ports, and a set of terminal "a" and "b" is balanced test port. DUT (the artificial power line is in this paper) is connected to the balanced test port (a set of "a" and "b").

For calibrating the LCL probe, devices that had known values of LCL were measured. In Fig.2, a resister R6 (100 Ω) was connected to the balanced

test port (a set of "a" and "b"). And a resistor Rcal. was connected to one side of the R6 to make a known value of LCL at the balanced test port. A network analyzer was used for the LCL measurement using the LCL probe. The result of calibration is shown in Table 1. From the calculation and measurement results, the LCL probe has a good performance of LCL measurement. Calculation results of LCL (LCL-c) were given by eq. (2) [3].

$$LCL = \frac{E_c}{V_d} = \frac{E_c}{2V_p} = \frac{[R_6 // (R_4 + R_5)] + 4Rcal + 4R_3}{2[R_6 // (R_4 + R_5)]} \qquad (2)$$

where R6//(R4+R5) signifies R6 in parallel with (R4+R5).

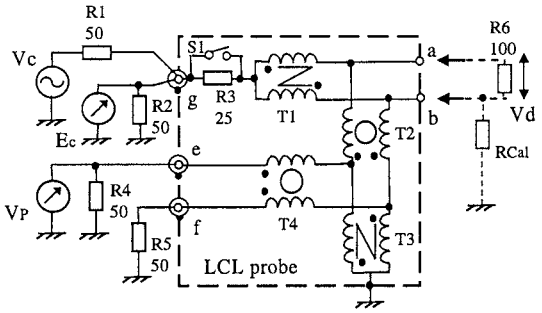

Fig.2 The LCL probe schematic circuit diagram and LCL measurement method using the LCL probe.

Table 1 LCL probe calibration		
Rcal. [Ω]	LCL-c [dB]	LCL-m [dB]
33	9.0	9.0- 9.6
68	12.5	12.5- 12.8
330	23.3	23.3- 23.6
560	27.6	27.6- 27.8
1000	32.4	32.3- 33.0

"LCL-c" means calculation results.
"LCL-m" means measurement results.
The frequency range is 0.15 to 30 MHz.

2.2 Structure of the artificial power line

Structure of the artificial power line for measurement of radiated emission, LCL and current on the PLC modem's output is shown in Fig. 3. This structure was constructed in the anechoic chamber for EMI measurement. The artificial power line was consisted of conductor pair. The line had horizontal part of 10 m and vertical parts of 2 m. At the one end of the line, the AMN (Artificial main network, KNW-242C) was connected for power supplying to the PLC modems on the condition of stabilizing impedance of the end terminal of the line. In the AMN, one of the conductor pair was terminated to ground by 50 Ω, the other of it was the output port. In the case of the usual conducted EMI measurement, termination of the output port is set to 50 Ω by connecting an EMI receiver. In the case of this paper, a resister R was connected to the output port in order to set the end terminal of the line known values of LCL. LCL of the resistor network that consists of a resistor R and 50 Ω (in the AMN) is calculated shown in Table 2.

Table 2 LCL consists of R and 50 Ω				
R [Ω]	50	68	100	330
LCL [dB]	infinity	22.4	15.6	8.7

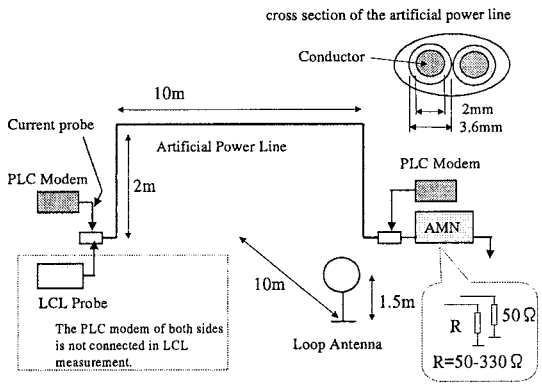

Fig.3 The artificial power line for measurement of radiated emission, LCL and current on the PLC modem's output.

For LCL measurement of the artificial power line, the LCL probe was connected to the opposite side to which the AMN was connected. For measurement of current and radiated emission at the time of PLC communication, PLC modems were connected to the both ends of the power line. In these cases, LCL probe was removed.
For measurement of current at the PLC modem output, the current probe (F-61) was used. PLC modem was connected to the power line with a plug via a coupler. The current of wiring between the coupler and the plug was measured. The modem, the coupler and the current probe in this measurement are shown in Fig 4.

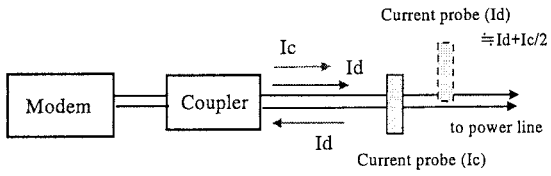

Fig.4 Measurement of current at the PLC modem output

The wiring consisted of two conductive lines. The current of two lines was measured separately and, next, this was measured collectively. The former corresponds to differential mode current and the latter corresponds to common mode current at the output of the PLC modem. In this case, although common mode current was contained in the former, since a difference hardly existed in the measurement result on each line, it treated as differential mode current.

For measurement of radiated emission at the time of the PLC communication, the loop antenna (HFH2-Z2) was put on the position with a horizontal distance of 10m from the center of the power line and a height of 1.5m (distance from the center of the antenna loop to the chamber's floor). The measured emission levels were expressed as electric field strength by using the conversion coefficient attached to the antenna.

3. Measurement results

3.1 LCL of the artificial power line

Measurement results of LCL at the terminal of the artificial power line for connecting the PLC modem are shown in Fig.5. At the measurement position, the transmitting frequency range of the PLC modem is from 4 to 6 MHz. In this frequency range, LCL was over 50 dB when the measurement terminal of AMN was terminated by 50 Ω. Conductor pair of the power line was terminated by 50 Ω respectively at this position in this case. LCL became a small value when electrical unbalancing was generated by connecting the resistor R which was not 50 Ω. When the R was 330 Ω, LCL was 25 dB, and when the R was 68 Ω and 100 Ω, LCL were these middle figures. This relation of LCL was maintained in the measured frequency range, 150kHz - 30MHz.

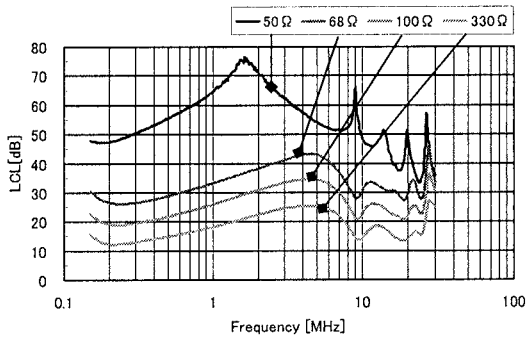

Fig.5 Measurement results of LCL of the artificial power line.

LCL at the terminal of the artificial power line for connecting the PLC modem were calculated in order to evaluate the measurement results of LCL. The calculation results are shown in Fig.6. The artificial power line shown in Fig.3 was converted into equivalent circuit in this calculation. The circuit model for calculation is shown in Fig.7. Circuit parameters of the segment were calculated by the method using in the reference [4], etc. In the frequency range of 10MHz or less, the calculation results and the measurement results are well in agreement.

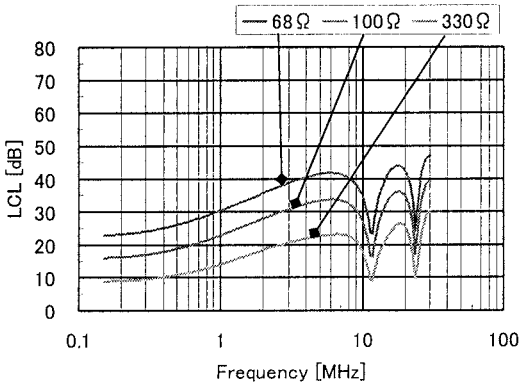

Fig.6 Calculated results of LCL of the artificial power line.

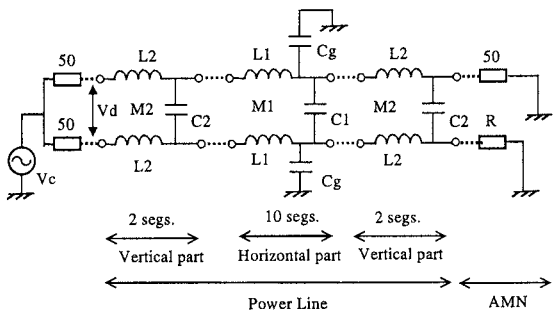

Fig.7 The circuit model for calculation of LCL of the artificial power line.
L1=1.66uH, M1=1.4uH, C1=19.9pF, Cg=3.6pF, L2=1.32uH, M2=1.06uH, C2=23.3pF,

3.2 Current at the PLC modem output

Measurement results of current at the PLC modem output are shown in Fig.8. In Fig.8, the resistor R connected to the measurement port of the AMN is 50 Ω. And, CPE (a) or CPE (b) signifies the current measured on two conductive lines separately. CPE (a)+(b) signifies the current measured on two conductive lines collectively. Since it is almost equal, CPE (a) and CPE (b) have overlapped in the Fig.8.

One of the values that show electrical unbalance of the DUT is transverse conversion loss (TCL). TCL is usually defined as the ratio of the differential mode

voltage and the common mode voltage produced by this. In this paper, TCL was calculated from measured common mode and differential mode current as electrical unbalance of PLC modem in active. TCL in each resistor R are shown in Fig.9.
At the measurement position, the transmitting frequency range of the PLC modem is from 4 to 6 MHz. At the center frequency of this frequency range, it is 5MHz, in case the resistor R is 50 Ω, TCL is 38dB, and when the resistor R is 330Ω, it is 24dB. Therefore, the relation between the LCL and the TCL corresponding to R is in agreement. Moreover, since the current measured on each line of two lines hardly changed even if it changed the value of the resistance R, the result of Fig. 9 expresses the difference of the common mode current, which is the current measured on two lines collectively.

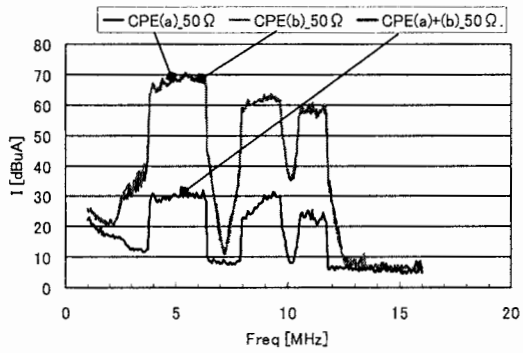

Fig.8 Measurement results of current on the power line generated by PLC (R=50Ω)

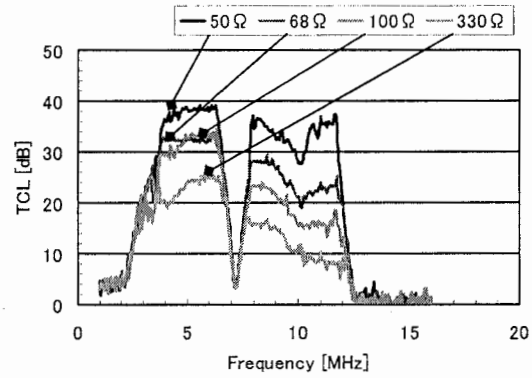

Fig.9 TCL calculated from measured current on the power line generated by PLC.

3.1 Radiated emission and LCL

For every resistance R, at frequency of 5MHz, LCL, TCL and an emission level are collectively shown in Table 3. LCL measured at the PLC modem connection end of the power line under the conditions to which the impedance between the line and the ground was changed in the position of AMN is 54-25dB. And TCL at the time of the modem communication obtained from current is 38-24dB. LCL and TCL at the time of communication were in agreement by 100Ω and 330Ω, and as large values of TCL as LCL was not obtained in 50Ω and 68Ω. Therefore, about 40dB is considered to be the limit of the degree of electrical balancing obtained with the PLC modem used in the experiment. Moreover, it is shown that the emission level corresponds to LCL and TCL.

Table 3 LCL and TCL vs. Emission level (at frequency of 5 MHz)

R [Ω]	50	68	100	330
LCL [dB]	54	42	35	25
TCL [dB]	38	33	34	24
E [dB μ V/m]	-	-	44	48

"-" means measurement limit of 41 dB.

4. Conclusion

In this study, the correlation of the LCL and the emission level was obtained. The LCL was measured at the terminal on the power line for connecting the PLC modem. And, radiated emission from PLC was measured by using the artificial power line and the PLC modems winch were in active.
Moreover, the TCL obtained from current measured at the PLC modem output was also effective as an evaluation value of electrical unbalance at the time of PLC modem communication. Since this technique can be measured with a current probe and a spectrum analyzer, it is easy to measure. And electrical unbalance in case the PLC modem is in a communication state can be evaluated.

References

[1] Akiyama and Yamane, "Measurement results of longitudinal conversion loss of real in-house electricity networks", 2002 Communications society conference of IEICE, B-4-17, Sept.2002
[2] Amemiya, Kuwabara and Ideguti, "Method for estimating electromagnetic interference due to unbalance in telecommunications line",IEICE Trans. Commun.,vol.E75-B,No.3,Mar.1992
[3] I.P.Macfarlane,"A probe for the measurement of electrical unbalance of Networks and Devices",IEEE Trans. on EMC,vol.41,No.1,Feb.1999
[4] Fujiwara, Maekawa and A.Z.Samir, "An analysis of load effect due to ferrite core attachment to parallel two-wire lines above a ground plane", IEICE Trans. Commun., vol. J84-B, No.3, Mar.2001