A–9–5 IMPEDANCE OF A MONOPOLE ANTENNA WITH A GROUND PLANE IMMERSED IN A MAGNETOPLASMA

Md.Abdul Matin, Kunio Sawaya, Takayuki Ishizone and Yasuto Mushiake

Department of Electrical Communications, Faculty of Engineering, Tohoku University, Sendai city, Japan

For feeding facilities monopole antennas with ground planes are preferred in experiments on dipole antennas. Similarly the diagnostic probes on the vehicle surface of rockets and satellites are usually monopole-type of antennas. When the surrouding medium is isotropic the field of a monopole antenna with a ground plane is the same as that of a dipole and its impedance is exactly the half of the dipole impedance. Because in an isotropic medium the 'conventional image theory' is valid and therefore, a separate field and impedance analysis for a monopole model is not necessary. However, if the medium is anisotropic for example a magnetoplasma or the earth's ionosphere the 'conventional image theory' is not applicable unless the static magnetic field is directed perpendicular to the ground plane of the monopole. This means that, for any other direction of the static magnetic field the reflected fields from the ground plane cannot be obtained in the conventional way and therefore a separate field and impedance analysis for a monopole model is necessary. Hence the purpose of this paper is to investigate the impedance of a monopole antenna with a ground plane immersed in a magnetoplasma having any arbitrary direction of the static magnetic field. Regarding this inapplicability of the conventional image theory in an anisotropic medium Wu[1] and Rao and Wu[2] proposed a modified image theory which requires that the permittivity tensor in the source-half plane and that in the image-half plane should be transpose to each other. However, the field analysis of a monopole and its image in such a two-media configuration including the effect of the discontinuity is rather complicated.

The geometry of the problem is illustrated in fig.1. The monopole axis is aligned with the Z-axis of a rectangular co-ordinate system with its ground plane along XY. The antenna is immersed in a cold collisional magnetoplasma having the static magnetic field $\mathbb{H}_0$ at an arbitrary direction θ with respect to the monopole axis. The field of the monopole antenna can be classified into (1) the primary field that corresponds to the waves travelling directly from the monopole and (2) the secondary field that corresponds to the waves reflected from the ground plane. Both the fields must satisfy Maxwell's field equations and the total field at any point in the medium is the sum of the two fields. The boundary condition is such that tangential components of the total field must vanish at the surface of the ground plane. With a uniaxial approximation on the medium permittivity tensor and by means of a plane wave analysis the required field solutions can be obtained [3] . The primary solution can be closed and the secondary solution

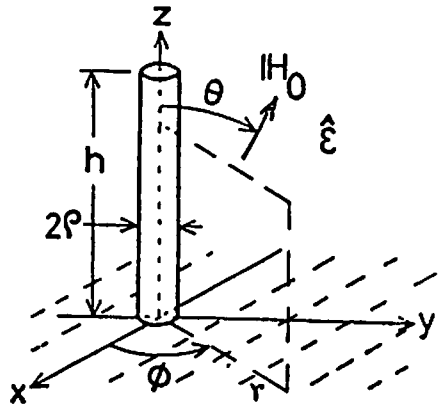

Fig.1 Co-ordinate system of the cylindrical monopole antenna.

can be partially closed. The integral part of the secondary solution has been arranged in a convenient form for numerical calculations. With the assumption of a sinusoidal current distribution associated with the propagation constant derived by Ishizone et al [4] the input impedance of the monopole antenna can be formulated by induced EMF method as follows:

$$
\begin{aligned}
Z_{in} = {} & \frac{-j15mB\overset{*}{B}}{\pi\sqrt{\varepsilon_1\varepsilon_3}\,|\sin mB|^2}\int_0^{2\pi}d\phi\int_0^1 dz'\int_0^1 dz_0'\cos m\overset{*}{B}(1-z')\cos mB(1-z_0')\left(\frac{e^{-j\sqrt{\varepsilon_3'}mR_1'}}{R_1'}-\frac{e^{-j\sqrt{\varepsilon_3'}mR_2'}}{R_2'}\right) \\
& -\frac{15}{\pi\sqrt{\varepsilon_3}\,|\sin mB|^2}\int_0^{2\pi}d\phi\int_0^1 dz'\int_0^1 dz_0'\sin m\overset{*}{B}(1-z')\sin mB(1-z_0')\left[-\frac{j\varepsilon_2 m}{\sqrt{\varepsilon_3'}}\frac{e^{-j\sqrt{\varepsilon_3'}mR_1'}}{R_1'}\right. \\
& +\sin^2\theta\,\frac{R''^2-2\cos^2\phi/\Omega^2}{R''^4}\left(e^{-j\sqrt{\varepsilon_1}mr_1'}-e^{-j\sqrt{\varepsilon_3'}mR_1'}\right)+\frac{jm\sin^2\theta\cos^2\phi}{\Omega^2R''^2}\left(\frac{\sqrt{\varepsilon_3'}}{R_1'}e^{-j\sqrt{\varepsilon_3'}mR_1'}\right. \\
& \left.\left.-\frac{\sqrt{\varepsilon_1}}{r_1'}e^{-j\sqrt{\varepsilon_1}mr_1'}\right)\right]+Z_{33}
\end{aligned}
$$

where

$$
\begin{aligned}
Z_{33} = {} & \frac{15}{\pi\varepsilon_3|\sin mB|^2}\int_0^{\infty}dK\,K\,J_0\left(\frac{Km}{\Omega}\right)\int_0^{2\pi}\frac{d\alpha}{F(K\alpha)}\left[\frac{Z_2(K_{31}^-)N_{11}(K\alpha)\left(jK_{31}^-\sin mB-B\cos mB+Be^{-jK_{31}^-m}\right)\left(jK_{31}^-\sin m\overset{*}{B}-\overset{*}{B}\cos m\overset{*}{B}+\overset{*}{B}e^{-jK_{31}^-m}\right)}{D(K_{31}^+)(B^2-K_{31}^{-2})(\overset{*}{B}{}^2-K_{31}^{-2})}\right. \\
& +\frac{Z_2(K_{31}^-)N_{12}(K,\alpha)\left(-jK_{32}^+\sin mB-B\cos mB+Be^{jK_{32}^+m}\right)\left(jK_{31}^-\sin m\overset{*}{B}-\overset{*}{B}\cos m\overset{*}{B}+\overset{*}{B}e^{-jK_{31}^-m}\right)}{D(K_{32}^+)(B^2-K_{32}^{+2})(\overset{*}{B}{}^2-K_{31}^{-2})} \\
& -\frac{Z_2(K_{32}^-)N_{21}(K\alpha)\left(jK_{31}^-\sin mB-B\cos mB+Be^{-jK_{31}^-m}\right)\left(jK_{32}^-\sin m\overset{*}{B}-\overset{*}{B}\cos m\overset{*}{B}+\overset{*}{B}e^{-jK_{32}^-m}\right)}{D(K_{31}^+)(B^2-K_{32}^{+2})(\overset{*}{B}{}^2-K_{32}^{-2})} \\
& \left.-\frac{Z_2(K_{32}^-)N_{22}(K\alpha)\left(-jK_{32}^+\sin mB-B\cos mB+Be^{jK_{32}^+m}\right)\left(jK_{32}^-\sin m\overset{*}{B}-\overset{*}{B}\cos m\overset{*}{B}+\overset{*}{B}e^{-jK_{32}^-m}\right)}{D(K_{32}^+)(B^2-K_{32}^{+2})(\overset{*}{B}{}^2-K_{32}^{-2})}\right]
\end{aligned}
$$

$$
m=K_0l,\quad \Omega=\frac{l}{\rho},\quad B=\left[\varepsilon_1(\varepsilon_1\cos^2\theta+\varepsilon_3'\sin^2\theta)\right]^{\frac{1}{4}},\quad \varepsilon_1=1-\frac{L}{1-M^2},\quad \varepsilon_3'=1-L,\quad \varepsilon_2=\varepsilon_1\cos^2\theta+\varepsilon_3'\sin^2\theta,
$$

$$
R_1'=\sqrt{\frac{\cos^2\phi}{\Omega^2}+\frac{a}{b}\left\{\frac{\sin\phi}{\Omega}-c(z'-z_0')\right\}^2+a(z'-z_0')^2},\quad R_2'=\sqrt{\frac{\cos^2\phi}{\Omega^2}+\frac{a}{b}\left\{\frac{\sin\phi}{\Omega}-c(z'-z_0')\right\}^2+a(z'+z_0')^2},
$$

$$
r_1'=\sqrt{\frac{1}{\Omega^2}+(z'-z_0')^2},\quad R''=\sqrt{\frac{\cos^2\phi}{\Omega^2}+\left\{\frac{\sin\phi\cos\theta}{\Omega}-(z'-z_0')\sin\theta\right\}^2}
$$

$$
K_g=K_{31}^{\pm},\ K_{32}^{\pm};\qquad K_{31}^{\pm}=\pm\sqrt{\varepsilon_1-K^2},\quad K_{32}^{\pm}=-cK\sin\alpha\pm\sqrt{d-K^2(a\cos^2\alpha+b\sin^2\alpha)}
$$

$$
a=\frac{\varepsilon_1}{\varepsilon_1\sin^2\theta+\varepsilon_3'\cos^2\theta},\quad b=\frac{\varepsilon_1\varepsilon_3'}{(\varepsilon_1\sin^2\theta+\varepsilon_3'\cos^2\theta)^2},\quad C=\frac{(\varepsilon_3'-\varepsilon_1)\sin\theta\cos\theta}{\varepsilon_1\sin^2\theta+\varepsilon_3'\cos^2\theta},\quad d=\frac{\varepsilon_1\varepsilon_3'}{\varepsilon_1\sin^2\theta+\varepsilon_3'\cos^2\theta}
$$

$$
N_{11}(K,\alpha)=X_2(K_{32}^-)Y_2(K_{31}^+)-X_2(K_{31}^+)Y_2(K_{32}^-),\quad N_{12}(K,\alpha)=X_2(K_{32}^-)Y_2(K_{32}^+)-X_2(K_{32}^+)Y_2(K_{32}^-)
$$

$$N_{21}(k,\alpha) = X_2(k_{31}^-)\,Y_2(k_{31}^+) - X_2(k_{31}^+)\,Y_2(k_{31}^-)\,,\quad N_{22}(k,\alpha) = X_2(k_{31}^-)\,Y_2(k_{32}^+) - X_2(k_{32}^+)\,Y_2(k_{31}^-)\,,$$

$$F(k,\alpha) = X_2(k_{31}^-)\,Y_2(k_{32}^-) - X_2(k_{32}^-)\,Y_2(k_{31}^-)\,,\quad X_2(k_3) = -(\varepsilon_1-\varepsilon_3')\sin\theta\,(k\sin\alpha\cos\theta - k_3\sin\theta)\,,$$

$$Y_2(k_3) = -(\varepsilon_1-\varepsilon_3')\sin\theta\cos\theta\,(k^2\sin^2\alpha + k_3^2 - \varepsilon_1)\,,\quad Z_2(k_3) = -\varepsilon_2(k^2\sin^2\alpha + k_3^2\varepsilon_1) - \varepsilon_1 k^2\cos^2\alpha,$$

$$D(k_3) = (k^2+k_3^2-\varepsilon_1)\left\{\left(\varepsilon_1 k^2\cos^2\alpha + \varepsilon_2 k^2\sin^2\alpha + (\varepsilon_1\sin^2\theta + \varepsilon_3'\cos^2\theta)k_3^2 + 2(\varepsilon_3'-\varepsilon_1)\sin\theta\cos\theta\, k k_3\sin\alpha - \varepsilon_1\varepsilon_3'\right)\right\}.$$

The above expression for the input impedance of the monopole is formulated for any arbitrary direction of the static magnetic field. The associated in-integrals have been performed numerically and the results have been compared with the half of a dipole impedance obtained by Sawaya et al [5] . In fig-2 the monopole impedance and the half of a dipole impedance for a specified set of parameters are shown by solid and dotted lines respectively. The difference between them accounts for the effect of the anisotropy of the medium on the ground plane for arbitrary directions of the static magnetic field. The frequencies at the oblique resonances and the upper hybrid resonance are the same in both the cases. However, the relative impedance values are different. The difference becomes significant when the operating frequency is very low and almost negligible at higher frequencies. At frequencies below the lower resonance cone the monopole reactance has a rapid tendency to be inductive.

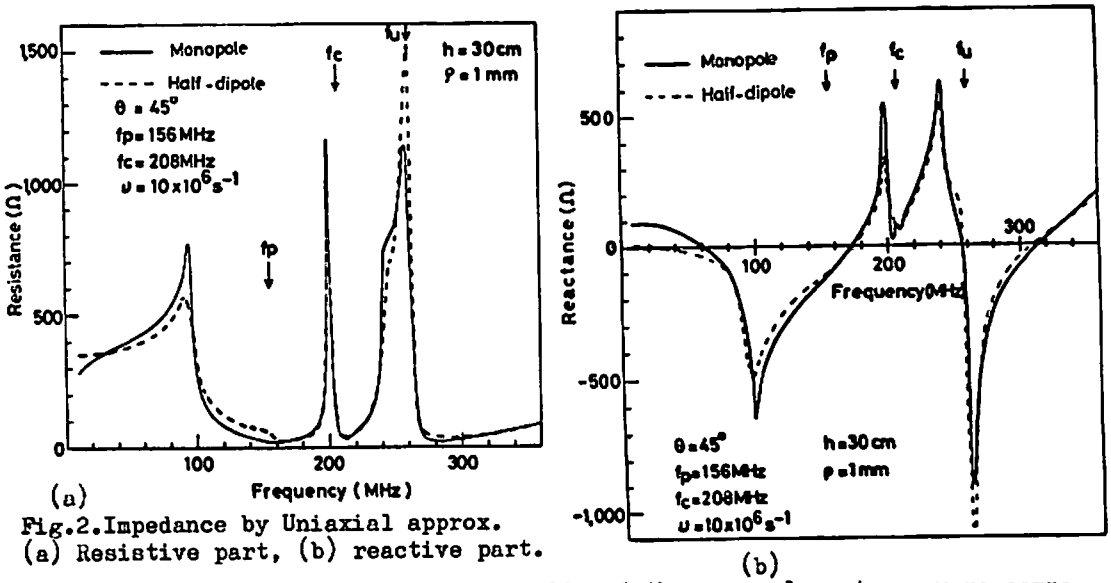

Fig.2.Impedance by Uniaxial approx.
(a) Resistive part, (b) reactive part.

The theoretical impedance results of the monopole antenna were compared with experimental data. The experimental set-up are the same as described by Sawaya et al except that the impedance was measured by a network analyser. The plasma frequency and the collision frequency of the measured data were determined by curve fitting around the peak of the upper hybrid resonance. With the parameters so determined the theoretical curves were drawn and compared with the measured data for the entire frequency range of operation (fig. 3). The results are in agreement except at low frequencies. If the effect of a sheath formed around the antenna is considered, the results are in well agreement. The low frequency inductive reactance becomes capacitive with the effect of the sheath. However, the collision frequency becomes nearly 10 times

that calculated from collision cross-section. Sawaya also observed a similar tendency of high collision frequency while interpreting the results with a dipole impedance. However, in the present case a reduction of 30% is obtained. This occurs from the difference of the peaks of the monopole and the dipole impedance at the upper hybrid resonance where the curve fitting has been performed. Besides these, the lower quarter-wave-length resonance, the upper quarter-wave-length resonance , the half-wave-length resonance etc. pertinent to the length of the monopole are the same as were observed by Sawaya.

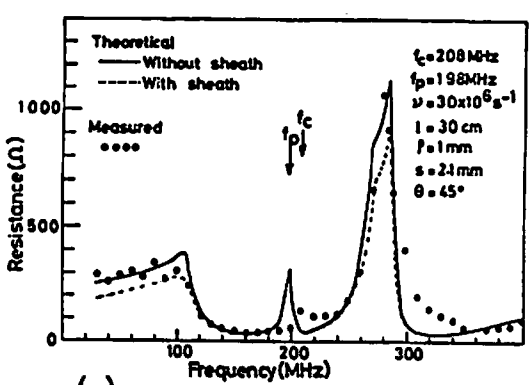

(a)

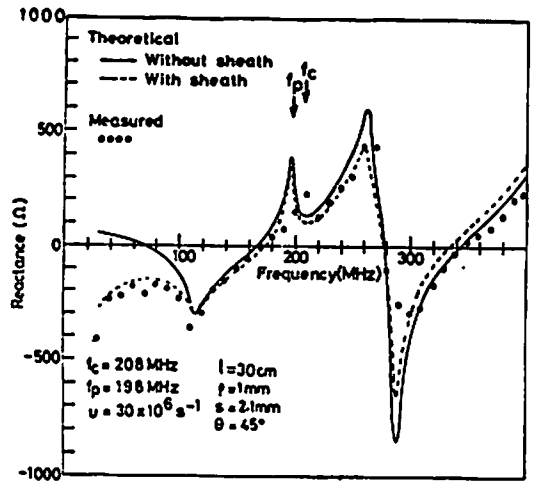

(b)

Fig.3. Comparision between the theoretical impedance results and the experimental data. (a) Resistive component and (b) reactive component.

The inapplicability of the conventional image theory in a magnetoplasma resulted in the preparation of this paper describing a separate impedance results for a monopole model . At higher frequecies the monopole impedance can be approximated as half of a dipole impedance but not so at very low frequencies.so long as the direction of the static magnetic field is arbitrary. The well agreement between the theoretical and the experimental results indicates that the uniaxial approximation is a good approximation for interpreting the impedance of a linear antenna in a magnetoplasma. Also the assumption of a sinusoidal current distribution seems quite suitable.

Authors would acknowledge thanks to Prof. S. Adachi for valuable suggestions and encouragement with this work. Also to Mr. H.Ishikawa, M.Tsuchiya and I.Okumura for assistance in carrying out the experiments.

References:

[1] C.P. Wu,"On the inapplicability of image theory", IEEE Trans. AP-12, pp.127-128, Jan., 1964.

[2] B.R.Rao and T.T.Wu,"On the inapplicability of image theory in anisotropic media", IEEE Trans. AP-13, pp.814-815, Sept., 1965.

[3] M.A.Matin, " Impedance of a monopole antenna with a ground plane immersed in a magnetoplasma" M.E. dissertation, Tohoku Univ. Sendai, Feb.,1978.

[4] T.Ishizone, S.Adachi, K.Taira, Y.Mushiake and K.Miyazaki, "Measurement of antenna current distribution in an anisotropic plasma", IEEE Trans. AP-17, pp.678-679, Sept.,1969.

[5] K.Sawaya, T.Ishizone,and Y.Mushiake,"Measurement of the impedance of a linear antenna in a magnetoplasma" Radio Sci. vol.13, pp.21-29, Jan.-Feb., 1978.