A Wide Beamwidth Small-size Circularly-Polarized Antenna

#Kwai-Man Luk [1], Biqun Wu [2]
[1] The State Key Laboratory of Millimeter Waves, City University of Hong Kong
Tat Chee Avenue, Kowloon, Hong Kong, eekmluk@cityu.edu.hk
[2] The State Key Laboratory of Millimeter Waves, City University of Hong Kong
Tat Chee Avenue, Kowloon, Hong Kong, 50538940@student.cityu.edu.hk

1.Abstract

A novel circularly polarized antenna with wide angular coverage is presented. The proposed antenna is composed of four separate patches backed by a compact ground reflector. A single-feed technique is proposed to excite four separate patches for circularly polarized operation. Four open-circuit vertical posts are located on every corner of the square ground reflector to reduce the size of ground reflector. Experimentally, it can achieve an impedance bandwidth (SWR<2) of 19% and a 3dB axial ratio bandwidth of 3.8%. Within the axial ratio operating band, the 3-dB beamwidth is 101.4° ± 1.4° with a gain of 5.76dBi ± 0.18dBi.

2. Introduction

Recently, there has been a tremendous growth of the telecommunications services such as the radar, Global Positioning Satellite and cellular communication. The increasing demand for wireless communications is continuously driving many researchers into innovations of various wireless systems. One of the key components of wireless technology is antenna. Circularly polarized (CP) antennas have attracted more attention than Linearly Polarized (LP) antennas for mobile wireless and satellite communications due to their greater flexibility in orientation angle between transmitting and receiving antennas, better mobility and weather penetration.

The CP antennas are required to have wide field of views for many satellite communication applications. Some particular applications are requested the CP antennas to have over 100° wide beamwidth. Moreover, the CP antennas should have good gain and circularly polarized performance (low axial ratio) from around 10° above horizon to the zenith. As most of satellite systems require lightweight, compact, low cost and easy to mass production, the patch antenna is particularly suitable among other type of CP antennas.

Generally, the CP antennas can be separate into two categories: one is single-fed type CP antenna, the other is dual-fed type CP antenna. For single-fed type antenna[1-3], the feeding structure is relatively simple without the need of an external feed network to provide the 90° phase difference for two orthogonal resonant modes. However, traditional single-fed CP antennas have an extremely narrow axial ratio bandwidth (1% or less) [1]. One of the techniques for enhancing the axial ratio bandwidth is employing the slots on the radiator. In[2], the proposed antenna using cross-slot exhibits a gain of 11dBi over a 3 dB axial ratio bandwidth of 5%. However, it has a bulky size of one wavelength. For the dual-fed type CP antenna, the circular polarization can be generated by independently exciting two orthogonal resonant modes with equal amplitude and 90° phase difference. The matching network can be constructed by 90° hybrid, or a Wilkinson power divider. This feeding technique can provide a broader axial ratio bandwidth (over 10%) comparing with the single-fed technique[4-5]. However, as it is mentioned above, the external feeding network increase not only the complexity of antenna structure but also production cost.

In this paper, we present a novel small-size circularly polarized antenna with wide angular coverage by using single probe feed and open-circuit vertical posts technique. It achieves over 100° beamwidth with the axial ratio bandwidth with a small ground reflector.

3. Antenna Description and Geometry

The geometry of the proposed antenna operated at around 3.9 GHz is shown in Fig.1-2, with detailed dimensions shown in TABLE Ⅰ. The dimensions were selected after a detailed parametric study for good performance. The proposed antenna consists of four separate metallic patches printed on a substrate with $\varepsilon_r = 2.33$ and thickness of 1.57mm. The substrate with size of P x P = 24.3mm x 24.3mm (about $0.32\lambda_o$ x $0.32\lambda_o$) is supported by a coaxial cable (BELDEN 1671A) and placed H=11mm ($0.14\lambda_o$) above the ground reflector. The patches A and C are identical with size of P1 x P2 = 1.5mm x 12mm (about $0.02\lambda_o$ x $0.16\lambda_o$) and connected by a metallic bridge printed on the bottom layer of substrate. The patches B and D are also identical with size of P3 x P2 = 22.5 mm x 12mm (about $0.29\lambda_o$ x $0.16\lambda_o$). The patch D is connected to the probe of coaxial cable using another orthogonal bridge printed on the top of the substrate. And the patch B is connected to the outer metallic shield of the coaxial cable. The four open-circuit vertical posts with height of H_{SP} = 10.6mm ($0.19\lambda_o$) are located on every corner of the square ground reflector to reduce the size of the ground reflector to be only GD x GD = 30.3mm x 30.3mm (about $0.39\lambda_o$ x $0.39\lambda_o$).

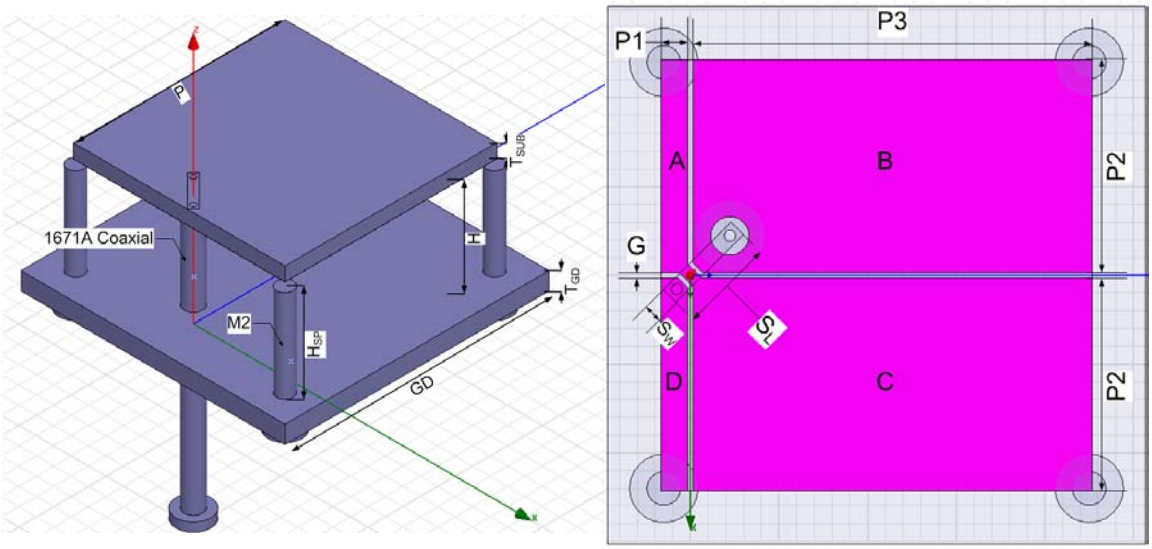

(a) 3D-view (b) Top view

Fig. 1. Geometry of the proposed antenna

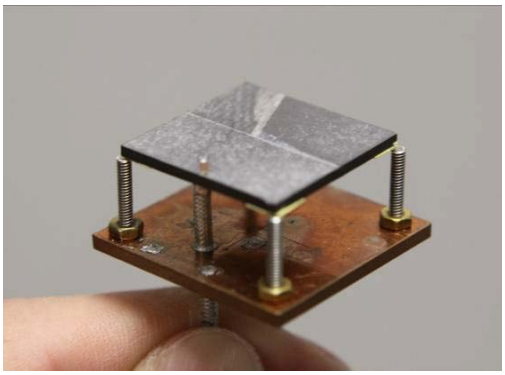

Fig. 2. Photo of the proposed antenna

TABLE Ⅰ

Dimensions of proposed antenna

Parameters	GD	H	T_{GD}	H_{SP}
Values/mm	30.3 ($0.39\lambda_o$)	11 ($0.14\lambda_o$)	2 ($0.03\lambda_o$)	10.6 ($0.19\lambda_o$)
Parameters	P	T_{SUB}	G	P1
Values/mm	24.3 ($0.32\lambda_o$)	1.57 ($0.02\lambda_o$)	0.3 ($0\lambda_o$)	1.5 ($0.02\lambda_o$)
Parameters	P2	P3	S_W	S_L
Values/mm	12 ($0.16\lambda_o$)	22.5 ($0.29\lambda_o$)	1.0 ($0.01\lambda_o$)	5.4 ($0.07\lambda_o$)

4. Results Analysis

Simulation results of SWR, radiation pattern and gain were obtained by HFSS. The performance of the prototype was measured by Agilent E5071C Network Analyzer and SATIMO Near-field Measurement System. As shown in Fig. 3, the Simulated impedance bandwidth of the proposed antenna is about 23.9% (SWR<2) ranging from 3.5GHz to 4.45GHz while the measured impedance bandwidth is about 19.3% (SWR<2) ranging from 3.5GHz to 4.25GHz. The measured SWR is slightly mismatched at higher frequency band. An average measured gain of 5.76dBi can be observed. There are about 0.8dBi difference between the simulation and measurement results. Fig. 4 shows the simulated and measured axial ratio against frequency. The simulated axial ratio bandwidth of 7.2% (<3 dB) is achieved over the frequency range from 3.77–4.05 GHz while the measured axial ratio bandwidth of 3.8% (<3 dB) is achieved over the frequency range from 3.85–4.0 GHz. The simulated and measured radiation patterns at 3.90GHz are plotted in Fig.6. As it is mentioned above, the proposed antenna is right-handed circularly polarized (RHCP). At each frequency, the antenna shows a wide angular coverage within the 3 dB axial ratio bandwidth. Table II tabulates the measured 3dB beamwidth at 3.87 and 3.99GHz. It can be observed that, the 3 dB beamwidth remains over 100° coverage within the 3dB axial ratio band. Similar performance can be observed in both the Φ=0° and Φ=90° planes. In the axial ratio passband, the radiation patterns of the antenna are stable and symmetrical in both planes.

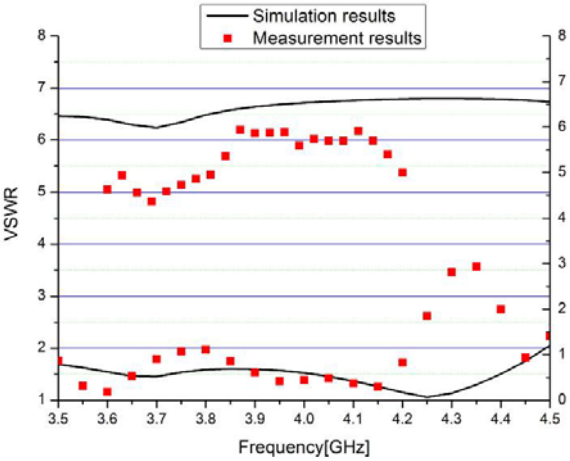

Fig. 3. The SWR and gain versus frequency

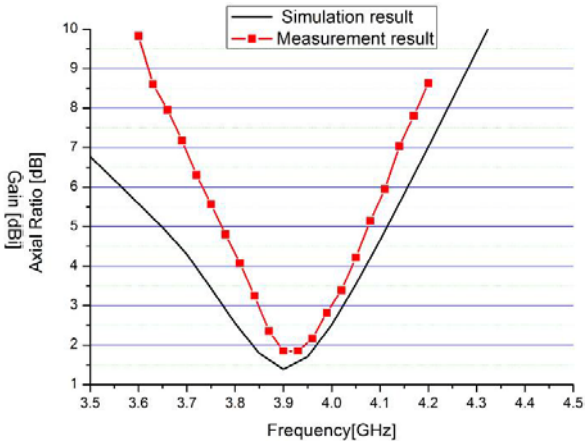

Fig. 4. The simulated and measured axial ratio versus frequency

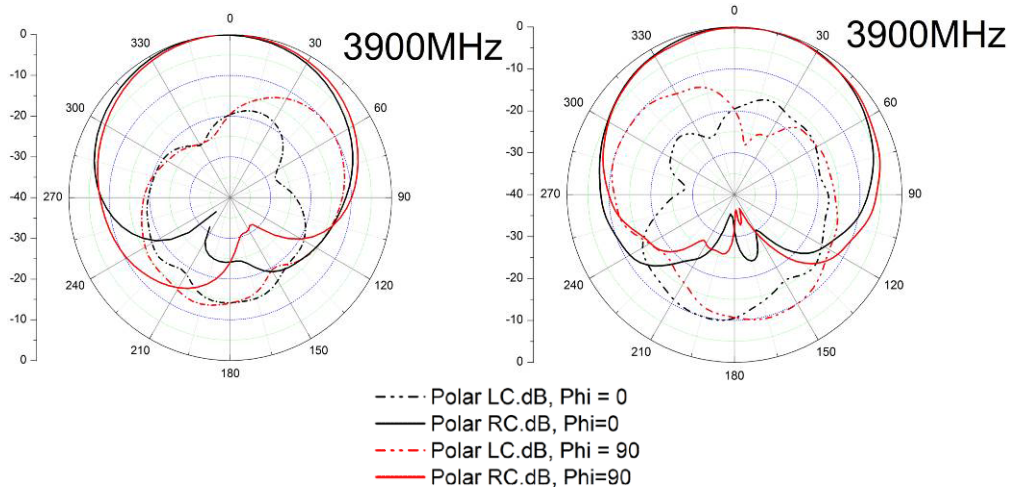

Fig. 5. Simulated and measured radiation patterns at 3.9GHz

Table II The 3dB beamwidth of proposed antenna at different frequencies

Frequency [MHz]	Phi = 0°		Phi = 90°	
	Angular covered	Total	Angular covered	Total
3870	-45.7^o to 57.1^o	102.8^o	-42.9^o to 62.9^o	105.8^o
3990	-42.9^o to 57.1^o	100°	-40.0^o to 63.9^o	103.9^o

5. Conclusion

A novel small size circularly polarized antenna with wide angular coverage has been successfully designed, constructed and analyzed. The operating principle of proposed antenna has been discussed. Both the simulated and measured results have been presented for comparison. The proposed antenna is small in size, which is only H x P x P = 11mm x 24.3mm x 24.3mm (about $0.14\lambda_o$ x $0.32\lambda_o$ x $0.32\lambda_o$). The proposed antenna has wide angular coverage with over 100° 3 dB beamwidth, which can be useful for satellite communication and navigation applications.The document should be in a single-column. The body text must be in 11 pt regular. Number citations should be in square brackets, i.e. [1]. The acknowledgement and reference sections should not be numbered. Do not use page numbers. Paper is limited to four (4) pages.

Acknowledgments

This work was partially supported by a grant from the Research Grant Commerce of the Hong Kong Special Administration Region, China [Project No. CityU 119008]

References

[1] Iwasaki, Hisao; "A circularly polarized small-size microstrip antenna with a cross slot," *Antennas and Propagation, IEEE Transactions on* , vol.44, no.10, pp.1399-1401, Oct 1996

[2] Ka-Lam Lau; Hang Wong; Kwai-Man Luk; , "A full-wavelength circularly polarized slot antenna," *Antennas and Propagation, IEEE Transactions on* , vol.54, no.2, pp. 741- 743, Feb. 2006

[3] Hua-Ming Chen; Yang-Kai Wang; Yi-Fang Lin; Che-Yen Lin; Shan-Cheng Pan; , "Microstrip-Fed Circularly Polarized Square-Ring Patch Antenna for GPS Applications," *Antennas and Propagation, IEEE Transactions on* , vol.57, no.4, pp.1264-1267, April 2009

[4] Ka Ming Mak; Kwai Man Luk; , "A Circularly Polarized Antenna With Wide Axial Ratio Beamwidth," *Antennas and Propagation, IEEE Transactions on* , vol.57, no.10, pp.3309-3312, Oct. 2009

[5] Yong-Xin Guo; Lei Bian; Xiang Quan Shi; , "Broadband Circularly Polarized Annular-Ring Microstrip Antenna," *Antennas and Propagation, IEEE Transactions on* , vol.57, no.8, pp.2474-2477, Aug. 2009