Design of a Wideband Planar Antenna for UWB Communication

Shin In-Ho[1], Mahesh P. Abegaonkar[1], Ko Ji-Hwan[2] and Cho Young-Ki[1]
1: School of Electrical Engineering and Computer Science, Kyungpook National University, Daegu 702701, South Korea.
2: Kumoh University, Gumi, South Korea.

Abstract:

This paper proposes wideband biconical antennas for UWB (ultra wideband) communication. A small biconical antenna with ground is designed. This antenna exhibits an omni-directional pattern over a wideband. But this structure is difficult to fabricate. Hence we propose a planar biconical antenna which is fed by a coplanar waveguide (CPW). The 10 dB return loss bandwidth is 7.4 GHz (3.4-10.8 GHz). The simulation results obtained using CST's Microwave Studio are seen to be in good agreement with the measured results.

Introduction:

Much attention has been paid to commercial ultra wide band (UWB) systems, since the Federal Communications Commission adopted a "First Report and Order" that permits the marketing and operation of a new radio transmission technology in February 2002[1]. It is of a particular interest to design a compact antenna with good impedance matching characteristics over the whole UWB frequency range (3.1–10.6 GHz). Also, gain flatness and phase linearity are required for UWB antennas to suppress a distortion of waveforms[2]. Patch antennas are extensively used in wireless communications because of the following features: light weight, low cost, and ease of fabrication. As a drawback, it is well known that the bandwidth of patch antennas is narrow. Thus, many attempts have been made to widen the bandwidth of printed antennas. Various suitable antenna elements based on CPW-fed configurations have been proposed as a solution. This interest is related to the characteristics of CPW feed lines: low radiation loss, less dissipation, and easy mounting of shunt lumped passive elements or active devices without any need of holes as used in microstrip technology circuits. Biconical antennas are one of the promising candidates for UWB applications. However, the bandwidth of conventional printed biconical antennas is not yet sufficient to cover the UWB frequency band. In this paper, we propose a biconical antenna with ground and a CPW fed planar biconical antenna for UWB applications.

Small biconical antenna design:

A three-dimensional biconical antenna is shown in fig. 1. The cross-section is shown in fig. 1(b). The physical parameters of this antenna are also shown. The structure is fed co-axially as shown in the figure. The angles of the cones (θ_u and θ_d) and other parameters ($\phi_d, \phi_c, L, G, H, H_1, H_2, R, \phi_R$) are optimized using CST's microwave studio. The optimized parameters are as follows:

ISBN: 89-86522-78-0 94460©KEES

$$\theta_u = \theta_d = 45°, \phi_d = 3.73, \phi_c = 1, L = 11.5, G = 1.5,$$
$$H = 17.77, H_1 = 8.135, H_2 = 8.135, R = 8.135, \phi_R = 20$$

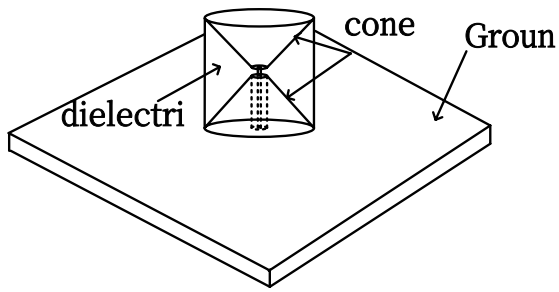

Fig. 1(a): The structure of a biconical antenna with ground plane

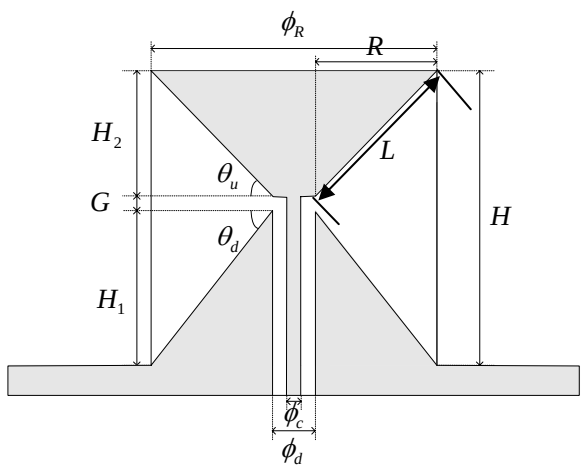

Fig. 1(b): Cross-sectional view of the structure with physical parameters

Using these optimized parameters, the antenna is fabricated and tested. The return loss results are shown in fig. 2.

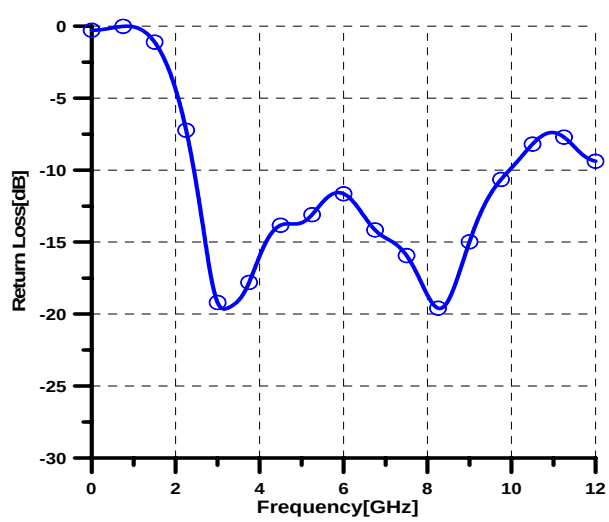

Fig.2: Return loss characteristics of the biconical antenna with ground

It is seen that the proposed antenna offers a broadband characteristics. The bandwidth is nearly 7.5 GHz. The radiation patterns (E-plane and H-plane) at various frequencies in this band are shown in fig. 3. Since this type of antenna is difficult to fabricate, we propose a planar design in the following section.

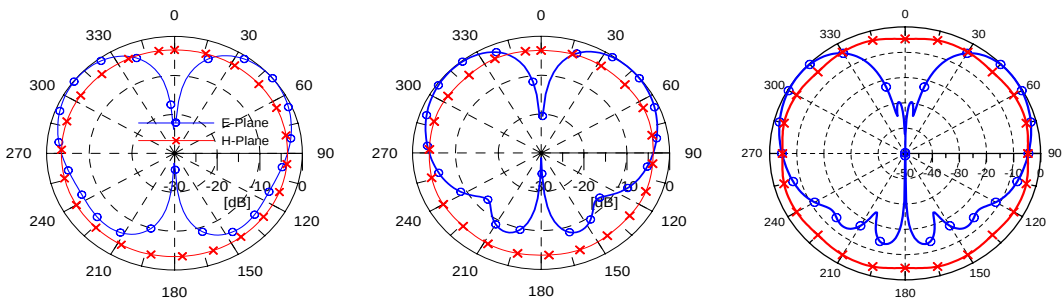

Fig. 3: Radiation patters for the biconical antenna at various frequencies.

Broadband planar antenna design and fabrication:

Fig. 4 shows the proposed antenna with the physical parameters that are optimized. The substrate used has ε_r =3.2 and height $h = 1.575mm$. The size of the substrate is 20mm x 20mm.

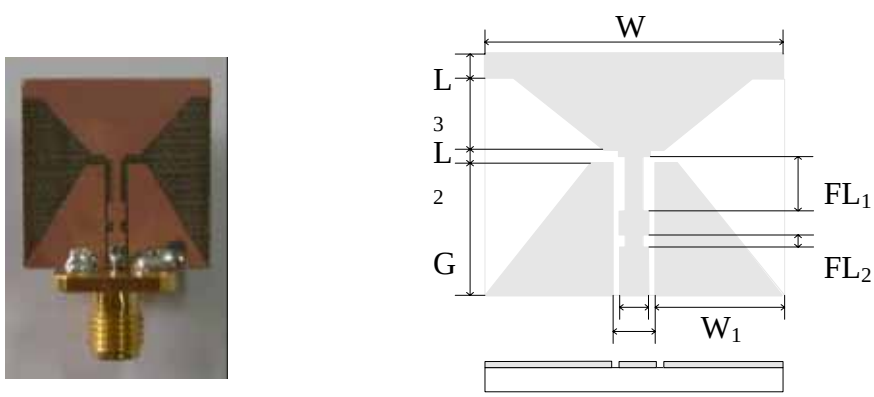

Fig.4: The proposed antenna

Fig. 5 shows the return loss of the proposed antenna. The simulated return loss and measured return loss are shown. The measurements are done using HP scalar network analyzer. The 10 dB return loss bandwidth is 7.4 GHz (3.4-10.8 GHz). The simulation results obtained using CST's Microwave Studio are seen to be in good agreement with the measured results.

It is seen from fig. 6 that the radiation pattern is almost similar throughout the UWB band. Hence, the proposed antenna can be used for UWB applications.

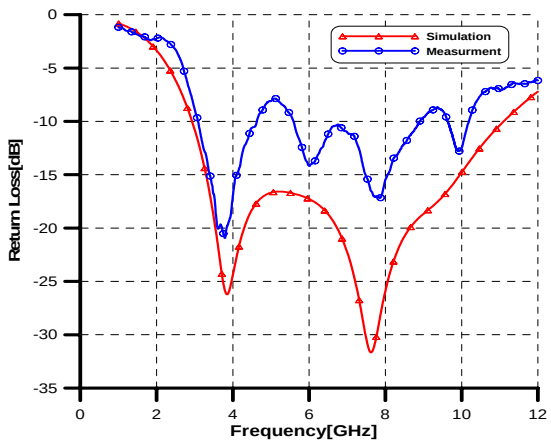

Fig.5: Simulated and measured return loss for the proposed antenna

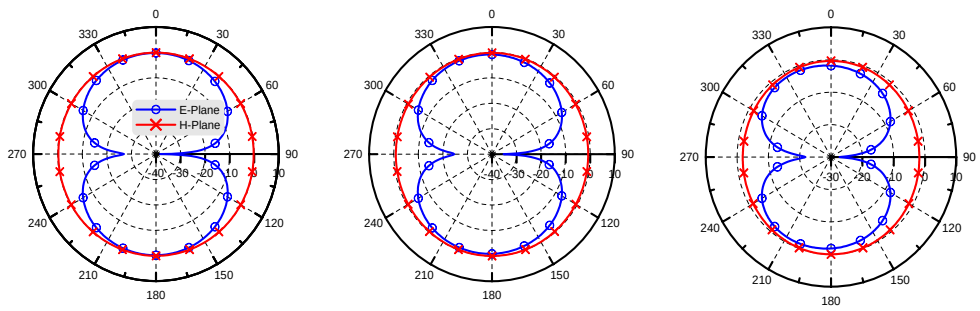

Fig. 6: Radiation patterns of proposed antenna at various frequencies

Conclusion:

A biconical and a CPW-fed planar printed antenna for UWB communications are proposed. The later have advantage of easy fabrication process. The antennas are simulated and optimized using CST microwave studio. The antennas are fabricated and tested. The simulated and measured results show fairly good agreement. It is seen that the antennas covers the UWB bands and can be used in communication applications.

Acknowledgement:

Mahesh P. Abegaonkar and Prof. Cho would like to thank the financial assistance under Brain Korea 21 (BK21) program. Prof. Cho would like to thank the financial support from Micro Information and Communication Remote Object-oriented System Research Center(MICROS).

References:

1. *FCC 1st Report and Order on Ultra-Wideband Technology*, Feb. 2002.
2. Katsuki Kiminami, Akimasa Hirata and Toshiyuki Shiozawa, “Double-Sided Printed Bow-Tie Antenna for UWB Communications”, IEEE Antennas and wireless propagation letters, vol. 3, 2004, pp. 152-153.