A SUGGESTION OF PROGRAMMABLE SMART ANTENNA BASE STATION WITH SDR TECHNOLOGY

Namkyu Ryu*, Seungwon Choi*, and Jeffrey H. Reed**

*HY-SDR Research Center, HIT406,
School of Electrical and Computer Engineering,
Hanyang University, Seoul, Korea
ryu7424@dsplab.hanyang.ac.kr
choi@dsplab.hanyang.ac.kr

**Mobile and Portable Radio Research Group (MPRG)
Bradley Dept. of Electrical and Computer Engineering, 432 Durham Hall,
Virginia Polytechnic Institute and State University
Blacksburg, VA 24061
reedjh@vt.edu

I. INTRODUCTION

The objective of developing the SDR technology is to realize plural system standards on a single hardware platform that is implemented mainly with the high-speed programmable digital signal processing devices[1]. A desired system standard can be selected by choosing a proper software module.

This paper addresses the problem of designing the hardware and software architecture of SABS that operates in an SDR network. A design example of SABS architecture that satisfies the requirements of SDR functionalities is also provided in this paper. We propose a hardware platform employing the open architecture of SABS, with which one can realize the multimode SDR system by selecting the modularized software. Note that the hardware platform itself remains unchanged while selecting a desired system standard among plural different standards[2].

The SDR technology includes the design of both hardware and software modules. The hardware module is reconfigured by the software module, which means that a given hardware platform is converted into a specific system standard or special-purpose communication system depending on the change of the software module. It is the most important feature of the SDR technology that a system update or an addition/deletion/modification of services can be performed extremely easily without changing the existing hardware[3].

In this paper, we present an open architecture of SABS that is suitable to the SDR network in such a way that one can fully exploit the merits of both smart antenna and SDR technologies. The proposed architecture has been applied to implement a system of SABS, which includes the modulation and demodulation parts of the SABS together with the interfaces with the SDR network as well as that among the modules within the SABS. The suitability of the proposed open architecture is demonstrated through a quantitative analysis obtained through the various experimental measurements provided from the design example of SABS.

ISBN: 89-86522-78-0 94460©KEES

II. SDR-BASED SABS OA

In this section, we present an open architecture of both hardware and software which provides a given SABS the openness to various standards, capability of distributed processing, and object-oriented design together with the software controllability. The SABS OA presented in this section satisfies the requirements of the SA API discussed in the previous section.

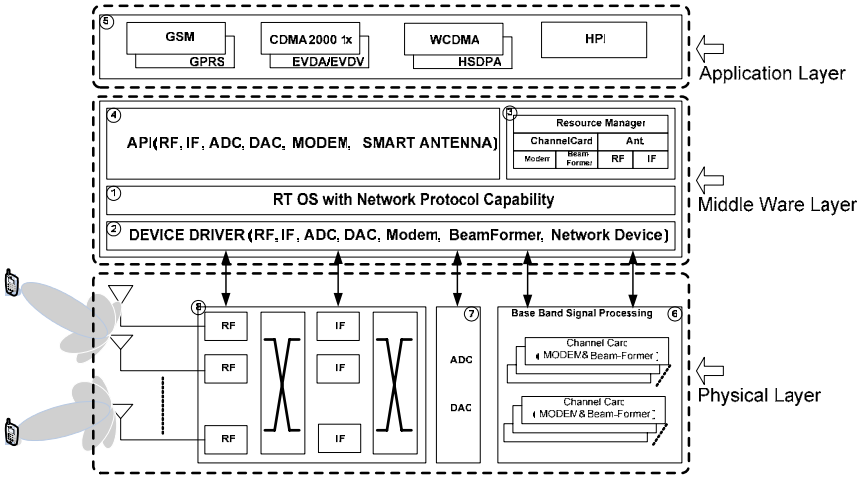

Figure 2: SDR-based SABS OA (Smart Antenna Base Station Open Architecture)

Fig. 2 illustrates an open architecture of SABS proposed for the SDR network[10]. The SABS OA shown in Fig. 2 consists of object-oriented software part, i.e., ①,②,③,④,⑤, and reconfigurable hardware part, i.e., ⑥,⑦,⑧, which are implemented with DSP(digital signal processor), FPGA(field programmable gate array), and embedded CPU(central processing unit). Note that the software part(①-⑤) should be layered for the hardware part(⑥-⑧) to be abstracted from the Application layer, ⑤, as much as possible. It particularly means that the Application part should operate without being related to the specifications of each of hardware resources.

Ideally, the Application layer must operate independently of each of dedicated hardware resources used to process the signals in the physical layer. The middleware layer, (①-④), enables a given communication task be executed at each of hardware resources, (⑥-⑧), on the basis of the object-oriented operation in accordance with the standardized interface regulations between the resources. Common Object Request Broker Architecture (CORBA) is one example of the middleware. The middleware layer, (①-④), consists of RTOS (Real-Time Operating System), Device Driver, Resource Management, and API as shown in Fig. 2.

III. DESIGN EXAMPLE OF SDR-BASED SABS OA

In this section, we present a design example of SDR-based SABS OA considering the requirements and interfaces discussed in Section II. As mentioned in the previous section, the hardware part of SABS OA to be designed should be abstracted as much as possible from the Application layer shown as ⑤ in Fig.2[9]. For achieving this, the entire system is partitioned into small modules in accordance with the function of each of the modules. Consequently, both hardware and software part are properly partitioned, layered, and modularized. In addition, the middleware of the SABS OA presented in this section provides the object-oriented operation to each of the hardware resources. Fig. 3 illustrates the block diagram of SDR-based SABS OA example proposed in this paper[10].

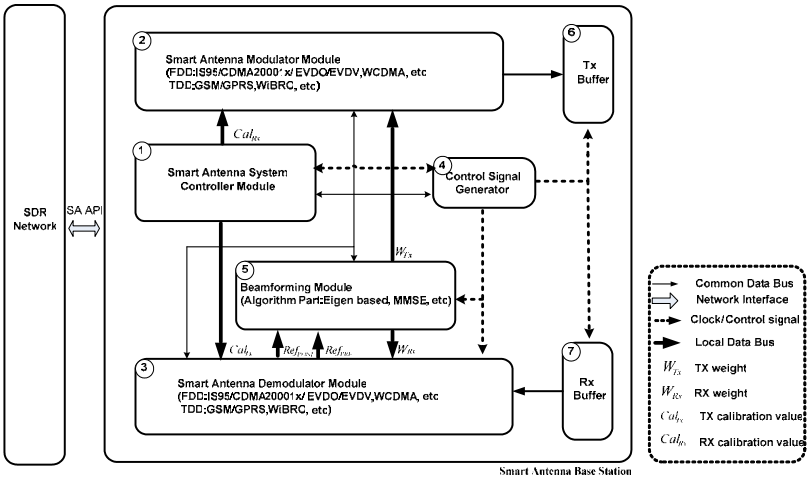

Figure 3: SDR-based Smart Antenna Base Station Open Architecture

The SABS shown in Fig. 3 consists of the following modules: first, SA system controller which interfaces the SABS to the SDR network and controls all the modules inside the SABS, which also performs the call processing, second, Modulator and Modulator Controller which generates the transmitting data for the forward link and controls the modulator, respectively, third, Beamforming module which provides the optimal beamforming parameter to each of the users, fourth, Demodulator and demodulator controller which retrieves the data transmitted from the corresponding mobile terminal for the reverse link and controls the demodulator, respectively, fifth, Array antenna part, sixth, RF and IF part for each of the antenna elements, and seventh, Analog-to-Digital and Digital-to-Analog conversion part[10]. As mentioned earlier, SDR network is capable of monitoring and controlling each of the modules discussed above. It is also possible for the network to modify and/or update the communication system through the software download procedure. The hardware and middleware (Real-Time OS, Resource Manager, API, and Device Driver) of the SABS system shown in Fig. 3 has been designed in such a way that all these functions can be executed through the software download procedure. In the design of SABS system, it can never be overemphasized that the interface between the beamforming module, ⑤, and the demodulator module, ③, should be determined in such a way that the SABS system computes the beamforming parameter, i.e., weight vector to be applied to each of the users, as accurately as possible. As far as the interface between the beamforming module and demodulator module is concerned, it is also important to note that the SABS system computes the beamforming parameter for each of the users based on the received data. On this basis, this paper claims that, in order for the beamforming module to be able to compute the accurate weight vector for each user, the reference signal provided from the demodulator module for the beamforming module to compute the weight vector should be the received data obtained after the refining procedure of demultiplexing procedure. More specifically speaking, the demodulator module should provide the reference signal, for the beamforming module to compute as accurate weight vector as possible, after the procedure of separating the reference signals of all the users into the one corresponding to each user by means of the demultiplexing procedure. In Fig. 3, the reference signal obtained after the demultiplexing procedure is referred to as Ref_{POST} while that obtained before the demultiplexing procedure is referred to as Ref_{PRE}. When the beamforming parameter is somehow not to be provided to each of the users individually, the SABS system could ignore Ref_{POST} to use Ref_{PRE} only. Note that the reference signal Ref_{POST} is obtained from Ref_{PRE} through a proper demultiplexing procedure which is defined in a given means of multiple access.

For example, Ref_{POST} is obtained by correlating Ref_{PRE} with the PN (Pseudo-random Noise) code of the target user in CDMA signal environment while the operation of forward Fourier transform of Ref_{PRE} produces Ref_{POST} in OFDMA (Orthogonal Frequency Division Multiple Access) signal environment. Similarly, in FDMA (or, TDMA) system, Ref_{PRE} should be processed with a proper band-pass filter (or, synchronization procedure) to obtain Ref_{POST}.

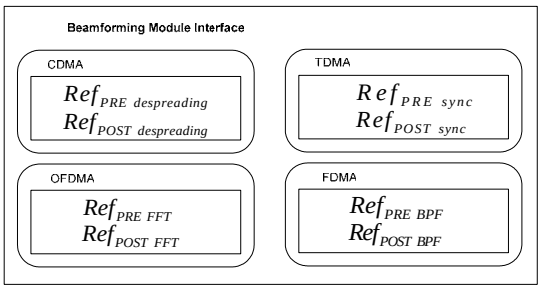

Figure 4: Interface between the beamforming module and demodulator module

Fig. 4 illustrates the interface between the beamforming module and demodulator module in various types of multiple access means such as CDMA, TDMA, OFDMA, and FDMA. What should be most importantly stressed in this discussion is that the received signal to be used for the beamforming module to compute the beamforming parameter should be the one that fully exploit the processing gain which is provided through the proper demultiplexing procedure. When the network communicates with each of the modules inside the SABS, a packet containing a command or data is transmitted to the SA system controller through ATM, E1, T1, or Ethernet. Then, the controller separates the packet to transfer the data or command to the destination module through the common data bus. Fig. 5 illustrates a block diagram of the channel card part of the SABS shown in Fig. 3. In our implementation, each channel card is capable of handling 3 users as shown in Fig. 5. Fig. 6 is a photograph of the channel card implemented in accordance with the architecture shown in Fig. 3. Note that the hardware and software architecture of the channel card provides the openness to various communication standards and capabilities of distributed and object-oriented processing that SDR system pursues[11,12]. It is also noteworthy that the channel card shown in Fig. 6 is reconfigurable in accordance with the software to be downloaded from the SDR network, which also means that the hardware of the channel card can be reused as the communication standard is converted from one to another[13].

Every module of the proposed channel card shown in Fig. 6 can interface with each other through the dual-port RAM, which means the computational load can be distributed properly depending on a given operation. The beamforming part of the channel card has been implemented with TMS320C6713, a high speed floating-point DSP, while the modulation/demodulation parts have been implemented with FPGA's. As the interfaces among the channel card controller, beamformer, and modem are supported by HPI (Host Port Interface) and fusing ROM, it is possible to perform the beamforming and modulation/demodulation in real-time processing through a proper software to be downloaded from the SDR network.

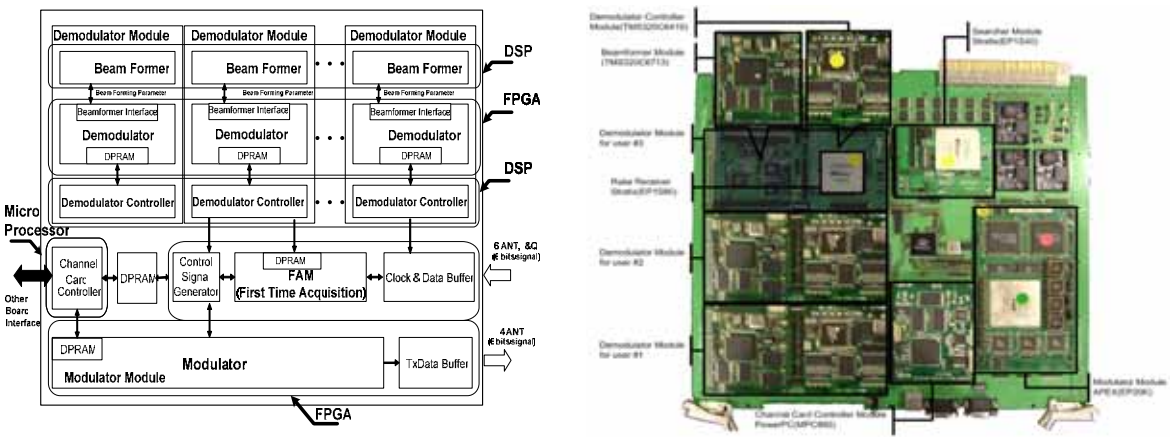

Figure 5: Block Diagram of SDR-based SABS Channel Card[15]

It is very important that the beamformer and modem part shown in Fig. 6 are capable of handling the various kinds of beamforming algorithms such as DOA (direction of arrival)-based Algorithms like MUSIC, ESPRIT, ML, etc[14], Training Sequence-based Algorithms like LMS, MMSE, RLS, etc[15], and Blind Beamforming Algorithms[16,17] like Eigenvector-oriented Method, CMA, etc.

IV. CONCLUSIONS

In this paper, we presented an open architecture for a SABS operating in SDR network. The SABS open architecture proposed in this paper is based on a philosophy that the software architecture should be layered for supporting the extension of Application programs while the hardware architecture should be partitioned for supporting the modularization of hardware resources. The layered and partitioned structure is the key aspect for the SABS to be able to accommodate various communication standards utilizing a single hardware platform in real-time[18]. Interface between hardware modules, software modules, and hardware and software modules should also be clearly defined for implementing a desired Application successfully. Based on the principles of the SABS OA shown in this paper, a practical design example of SABS has been presented with all the hardware resources being partitioned into proper modules and the interconnections among the modules being specified in terms of clock/control signal and common data bus exchanged among modules. The proposed SABS OA has been implemented and the performance of the implemented SABS system has been measured in a practical signal environment using commercial handsets operating in CDMA2000 1X circumstance. Finally, a channel card of the SABS has been implemented in accordance with the requirements and logical functionalities of SA API discussed in this paper.

Acknowledgement This work was supported by HY-SDR Research center at Hanyang University, Seoul, Korea, Under the ITRC Program of MIC, Korea.

References

[1] W. Tuttlebee, *Software Defined Radio Baseband Technology for 3G Handsets and Basestations*, John Wiley & Sons, 2003

[2] J. H. Reed, *Software Radio:A modern approach to radio engineering*, Prentice Hall Communications Engineering and Emerging technology series 2002.

[3] J. Mitola, "*The software radio architecture*," IEEE Commun. Mag., vol. 33, no. 5, pp. 26-38, 1995.

[4] OMG, *Architecture and Specification CORBA 2.4.2, Standard document*, OMG, Feb. 2001(available at www.omg.org).

[5] F. Templin, *An Encoding of Radio API Primitives for the ISI APT Radio via the SLIP Protocol*, Apr. 1998.

[6] W. Tuttlebee, "*Software Defined Radio— Origins, Drivers and International Perspectives*," John Wiley & Sons, 2002.

[7] S. Jeng, S. Ming and B. Lan, "*Multi-Mode Digital IF Downconverter for Software Radio Application*," IEICE Trans. Commun., vol. E86-B, no. 12 pp. 3498-3512 Dec. 2003.

[8] Winter, J., "*Performance Trends for Analog to Digital Converters*", IEEE Communications Magazine, Feb. 1999.

[9] Kurt Keutzer, "*Overview of configurable architectures*", EECS, Berkeley University.

[10] S. Choi and J. H. Reed, "*Smart Antenna API*," a power point presentation submitted to Technical Committee SDRF, Jun. 2004(available at www.sdrforum.org).

[11] 3GPP2, *Physical Layer Standard for cdma2000 Spread Spectrum Systems*, 3GPP2, Jul. 2001(available at www.3gpp2.org).

[12] J. S. Lee and L. E. Miller, *CDMA System Engineering Handbook*, Artech House, 1998.

[13] G. Paul, *Software Defined Radio for 3G*, Artech, 2003

[14] R. A. Monzingo and T. W. Miller, *Introduction to Adaptive Arrays*, John Wiley and Sons, 1980.

[15] H. Im and S. Choi, "*Performance Analysis of Smart Antenna Test-Bed Operating in a Wide-Band CDMA Channel*", IEEE Trans. On Microwave Theory and Techniques, vol. 49, no. 11, pp. 2142-2146, Nov. 2001.

[16] S. Choi and D. Shim, "*A Novel Adaptation Beamforming Algorithm for a Smart Antenna System in a CDMA Mobile Communication Environment*", IEEE Transaction on Vehicular Technology, vol. 49, no. 5, pp. 1795-1799, Sep. 2000.

[17] S. Kwon, I. Oh, S. Choi, "*Adaptive beamforming from the generalized eigenvalue problem with a linear complexity for a wideband CDMA channel*", Vehicular Technology Conference, IEEE VTS 50th , vol. 3, pp. 1890 -1894, Oct. 1999.

[18] H. Harada and M. Fujise, "*Feasibility Study on Over-the-Air Software Download for Software-Radio-Based Intelligent Transport Systems*" IEICE Trans. Commun., vol. E86-B, no. 12, pp. 3425-3431 Dec. 2003.