Proceedings of ISAP'04, Sendai, JAPAN

Design of Yagi-Uda Antennas by Multiobjective Optimization Techniques

Y. Tsuji T. Ikeda Y. Kuwahara

Graduate School of Science and Technologies, Shizuoka University
3-5-1 Johoku Hamamatsu, 432-8561 Shizuoka, Japan
tyluwab@ipc.shizuoka.ac.jp

Abstruct: A method of the Genetic Algorithm(GA), which various non-inferior solutions for each objective function (performance) can be obtained at one time trial of the numerical simulation, is proposed. It is capable of selection of design parameters according to the requirement. Using design examples of Yagi-Uda antenna, effectiveness of the proposed algorithm is demonstrated in comparison with the performance produced by conventional GA.

1. Introduction

In design of the antenna, structural parameters which satisfy such performances as gain, beamwidth, largest sidelobe level, and input impedance must be found. GA, which can globally search the optimum solution, is an attractive method. Johnes et al. have optimized the structural parameter of Yagi-Uda antenna by GA, and they reported that the design parameter by GA obtained better performance than the gradient method [1]. In their paper, the objective function for GA is expressed by weighting sum of each objective function in order to optimize various performances. Though determination method of the weight was not mentioned, it seemed to repeatedly try computer experiments using the empirical value. VEGA (Vector Evaluated Genetic Algorithm) is known as a method for solving the multiobjective optimization problem [2]. As a design method of the antenna using VEGA, Maruyama et al. have proposed VEGA-ICT [3]. However, VEGA cannot produce various non-inferior solutions necessary for design trade-off [2]. In this paper, the method capable of searching various non-inferior solutions by one trial of GA process is proposed. The individual fitness selected by the Pareto ranking method [4], is corrected by the sharing [5] in order to ensure diversity in the non-inferior solutions. In addition, the best N selection process [6] is applied in order to accelerate the convergence. It is demonstrated that the proposed method can search various non-inferior solutions by one trial of GA process with small number of generations.

2. Proposed Method

2.1 Pareto ranking method

The operation of the Pareto ranking method for optimizing two objective functions is explained using Fig.1. Horizontal axis and vertical axis in Fig. 1 show values of objective function 1 and 2. The white circles are values of the objective functions achieved by the individuals. The ranking of the non-inferior solution in the population is made to be 1. As for individuals which are not the non-inferior solutions, the ranking is made lower by only the number dominated by another individual. The individual denoted by (1) in Fig.1 is a non-inferior solution. The ranking of individual H becomes 5, because it is dominated by individual B,C,E,F. Fitness $f(x_i)$ of individual x_i is expressed by Formula (1), when the Pareto ranking method is used.

$$f(x_i) = \frac{1}{N_i} \qquad (1)$$

Ni is the ranking of individual x_i obtained by the Pareto ranking method.

2.2 Sharing

In operation of the sharing, the fitness in the area where non-inferior solutions are concentrated is reduced, and the fitness of isolating non-inferior solution is increased in order to keep diversity of the non-inferior solutions. Fitness $f'(x_i)$ corrected by the sharing is given by Formula (2).

ISBN: 4-88552-206-4 C3055©IEICE

$$f'(x_i) = \frac{f(x_i)}{\sum_{j=1}^{N} s(d(x_i, x_j))} \tag{2}$$

Here, $f(x_i)$ is fitness before correcting , and s(d) is the sharing function given by Formula (3).

$$s(d) = \begin{cases} 1 - \left(\frac{d}{\sigma_{share}}\right)^{\alpha} & d < \sigma_{share} \\ 0 & d \geq \sigma_{share} \end{cases} \tag{3}$$

α is the power index, and $d(x_i,x_j)$ is distance between individuals. σ_{share} is niche size, which decides whether evaluation is reduced when individuals are located at vicinity. Niche size can be calculated by Formula (4), when maximum value and minimum value of objective function given by the population is denoted by M_i (i = 1 2,… q : q is number of objective function) and m_i, respectively.

$$N\sigma_{share}^{q-1} - \frac{\prod_{i=1}^{q}(M_i - m_i + \sigma_{share}) - \prod_{i=1}^{q}(M_i - m_i)}{\sigma_{share}} = 0 \tag{4}$$

N is number of individuals.

2.3 Best N Selection

Best N selection process takes individuals of better fitness in order till the original population size among 2 populations (before and after crossover). When the best N selection process is applied, convergence speed accelerates, because population after crossover is composed of the individuals of high fitness.

3. Multiple Objective Optimization for Yagi-Uda Antenna

3.1 Modeling

The 4 elements Yagi-Uda antenna is composed of one driver, one reflector, and two directors as shown in Fig.2. The structural parameter of this antenna is represented by length L_1~L_1 and adjacency element spacing S_1~S_3. These parameters are encoded by the binary value. Combining the parameters encoded by binary code, the chromosome is created. Range of the length and element spacing is set to 0.3 λ ~0.7 λ and 0.1 λ ~0.45 λ ,respectively. These parameters are quantized by 6 bits.

3.2 Electromagnetic Analysis

Gain, directivity, input impedance of the antenna was calculated by Method of. Sinusoid function is used for the expansion function and weight function. The length of each division is set to 0.1λ or less.

3.3 Procedure

(1) Many chromosomes which design parameters are encoded are generated at random.
(2) Electromagnetic analysis is carried out using the design parameter given by chromosome, and VSWR, gain, sidelobe (including backlobe) level of Yagi-Uda antenna are calculated. This calculation is carried out for all individuals in the population.
(3) The Pareto ranking method is applied for three performance measures, and the fitness of each chromosome is calculated.
(4) The fitness is corrected by the sharing.
(5) The chromosomes for crossover are selected based on the roulette rule.
(6) Crossover is carried out based on the set crossover probability.
(7) The chromosomes for next generation are selected by the best N selection process.
(8) Mutation is caused based on the set mutation probability.
(9) Return to (2), if number of iteration has not reached to the set generation number.
(10) Optimization algorithm is finished, if it reached to the set generation number.

4. Design Examples

Here, design example of 4 elements Yagi-Uda antenna is demonstrated. Table 1 shows parameters used for the genetic algorithm. The crossover is a point crossing. The radius of the element is 0.003369λ. Because of applying the best N selection process, the crossing rate was set to 1 in order to enhance probability of appearance of good chromosome and to converge rapidly. The mutation rate was decreased with the progress of the iteration for the convergence.

Distribution of the performance achieved by chromosomes after 200 iterations is shown in Fig. 3(a). The x, y, z axis represent gain, largest sidelobe or backlobe level, VSWR (the standardization impedance is 50 Ω). Chromosome, which provides higher gain, low sidelobe and backlobe level, and VSWR around 1 is a good design result. Fig. 4 is a radiation pattern in consideration of next design requirements

(a) Medium designed values for all parameters are obtained.

(b) Priority is given to the gain.

(c) Priority is given to the backlobe level and VSWR.

Table 2 shows design parameters and performance. The values of literature [1] are shown for reference. The parameter of (a) provides lower sidelobe level without degradation of the gain and VSWR in comparison with the value of literature [1]. For the parameter of (b), higher gain can be achieved with some deterioration of VSWR. The parameter of (c) provides ultra-low backlobe level with deterioration of the gain. Though performance requirements to the antenna are different due to the application, various design parameters capable of trade-off are obtained by the proposed algorithm.

5. Conclusions

GA is suitable for the problem experimentally solved. Though the calculation amount of GA is small compared with random search, it is not an efficient optimization method. However, applying the proposed algorithm for the multiobjective optimization problems, it is possible to obtain various non-inferior optimum solutions with diversity and easily select the design parameters according to the design requirements. This algorithm can be applied similarly for the antenna design except for Yagi-Uda antenna.

Acknowledgement

This study was carried out by research fund from the Shizuoka industry creation organization.

References

[1] E. A. Jones and W. T. Joines, "Design of Yagi-Uda Antennas Using Genetic Algorithm," IEEE Trans. Antennas Propagat., Vol AP-45, No.9, pp.1386-1392, Sep.1997.

[2] J. D. Scaffer, "Multiple objective optimization with vector evaluated genetic algorithm," Proc. of the 1st International Conference on Genetic Algorithm and their Applications, pp.160-168, 1985.

[3] T. Maruyama and T. Hori, "Vector Evaluated GA-ICT for Novel Optimum Design Method of Arbitrary Arranged Wire Grid Model Antenna and Application of GA-ICT to Sector-Antenna Downsizing Problem," IEICE Trans.Commun., VolE84-B, No.11, pp.3014-3022, Nov. 2001.

[4] C. M. Fonseca and P. J. Fleming, "Genetic Algorithm for MultiObjevtive Optimization : Formulation, Discussion and Generalization," Proc. of the Fifth International Conference on Genetic Algorithm, pp.416-423, 1993.

[5] J. Horn, N. Nafpliots and D. E. Goldberg, "A niched Pareto genetic algorithm for multiple objective optimization," Proc. of the 1st IEEE Conf. Computation, pp.82-87, 1994.

[6] L. J. Eshelman, "The CHC adaptive search algorithm: How to have safe search when engaging in nontraditional genetic recombination," Foundation of Genetic Algorithms, Morgan Kaufmann Publishers, pp.265-283, 1991.

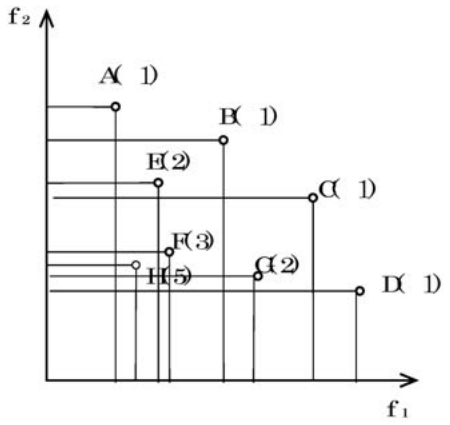

Fig. 1 Parato Ranking

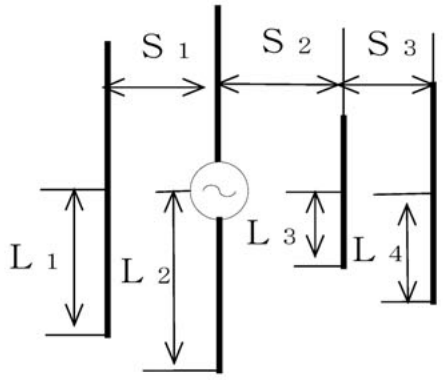

Fig.2 4 elements Yagi-Uda Antenna

Table1 Parameters for Genetic Algorithm

Number of Chromosomes	200(4elements) 300(6elements)
Generations	100
Crossover Rate	1
Mutation Rate	0.02→0.007

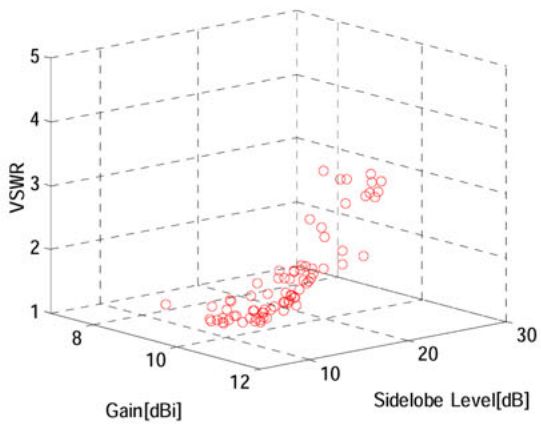

Fig.3 Distributions of Parato Solutions

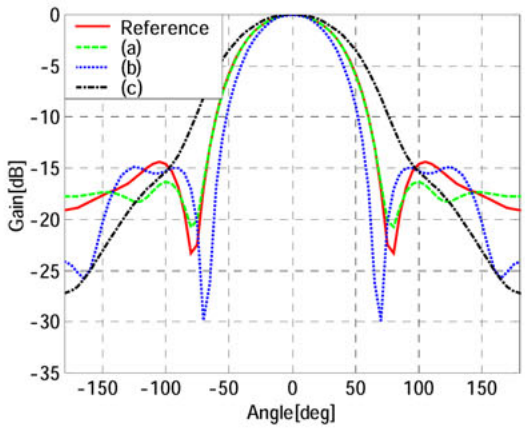

Fig.4 Typical Radiation Patterns

Table2 Structure Parameters and Performance(4 elements Yagi-Uda antenna)

	Reference		(a)		(b)		(c)	
Element	Length	Space	Length	Space	Length	Space	Length	Space
1[λ]	0.49	---------	0.484	---------	0.478	---------	0.510	---------
2[λ]	0.472	0.283	0.465	0.250	0.465	0.256	0.471	0.217
3[λ]	0.442	0.179	0.433	0.233	0.440	0.244	0.433	0.156
4[λ]	0.424	0.279	0.408	0.3	0.433	0.300	0.370	0.356
Gain[dBi]	9.93		10.0		10.9		8.78	
VSWR	1.33		1.38		2.02		1.42	
Sidelobe and Backlobe Level[dB]	-14.4		-16.3		-15.0		-25.8	