Proceedings of ISAP'04, Sendai, JAPAN

COMBINED FDTD AND CIRCUIT ANALYSIS FOR SELF-OSCILLATING MIXER DESIGN

Naobumi MICHISHITA and Hiroyuki ARAI
Department of Electrical and Computer Engineering, Yokohama National University
79-5 Tokiwadai, Hodogaya-ku, Yokohama 240-8501, Japan.
E-mail: naobumi@arailab.dnj.ynu.ac.jp

1 Introduction

A full-wave analysis of packaged microwave circuits with the FET was presented [1]. The small-signal circuit model of the FET was used, and the gate capacitor and drain current were shown by the Cartice Ettembelg model. This model is a basic equivalent circuit and is characterized by the intrinsic gallium arsenide field-effect transistor (GaAsFET). This cannot be applied to TriQuint's Own Model (TOM), which is a large-signal circuit FET model. Furthermore, little is known about this antenna problem. The equivalent circuit parameters of TOM are prepared by a device sheet, and the network analyzer performs the parameter extraction function. The FET, as actually used, can be expressed precisely in the analysis. Therefore, an active integrated antenna that is explained by TOM should be evaluated by total modeling, including the coupling between each element. In particular, FDTD can analyze the radiation pattern and electromagnetic distribution. Therefore, in the future, it can be an effective technique for use in analytic methods. For example, it can be used in designing high-frequency circuits and ensuring electromagnetic compatibility.

One of the applications of active antennas using GaAsFET is the self-oscillating mixer with electromagnetically-coupled antenna elements [2][3]. An active integrated antenna with an oscillator is connected to the GaAsFET and coplanar waveguide, and it determines the oscillating frequency by modulating an applied bias voltage. Since the IF output level is small, the parasitic element is arranged for the receiving antenna, and the shape and position of the parasitic element is examined through the measurement. This antenna structure should be examined by electromagnetic analysis, because an oscillating condition significantly depends on the coupling between the elements.

In this paper, we investigate the FDTD analysis of an active integrated antenna with an oscillator. The GaAs FET is implemented by TOM, and a state equation is directly solved by the parameters of the equivalent circuit, which is mentioned in the device sheet [4]. The voltage source, which is precisely modeled the actual structure for a coplanar waveguide, is presented. An oscillating condition significantly depends on the coupling between the elements, and the effect of the length of the gate and drain line to the oscillating frequency is examined in detail.

2 Voltage Source Approach for Coplanar Waveguide

Figure 1 shows the structure of an active antenna with an oscillator. A GaAsFET (NE3210S01) is installed in the dielectric substrate ($\varepsilon_r = 2.6$) of $84.8 \times 68.8 \times 1.6$ [mm]. The edge of the source line is connected via the ground plane, and the characteristic impedance of the coplanar waveguide with ground is 39 Ω. A DC bias voltage of 3.0 V is applied to a drain port, and an output port is observed when a feed pin is connected in the center of a drain conductor. The coarse mesh size is $\Delta x = \Delta y = \Delta z = 0.4$ mm, and the fine mesh size for the gap of 0.2 mm is $\Delta x = \Delta y = \Delta z = 0.1$ mm. The iteration is 200,000 timesteps, and the absorbing boundary condition is an 4-layer PML. The equivalent circuit of the FET is shown with TOM, and a state

ISBN: 4-88552-206-4 C3055©IEICE

equation is solved at each time step of the FDTD. Figure 2 shows the voltage source needed to combine the electromagnetic and circuit calculation. A pin is connected with the ground conductor (source line) from the center conductor of a coplanar waveguide (gate and drain line). This model precisely models the actual structure, because four leads of the FET are connected in each of the gate, drain, and two source lines. Figure 3 shows the analytic result of oscillating frequency. An oscillating frequency can be confirmed at 2.84 GHz.

3 Oscillating Frequency

Figure 4 shows the oscillating frequency when the bias voltage V_{ds} is varied. Figure 5 shows the oscillating frequency when the length of the source line L_s is varied. The effect of V_{ds} and L_s on the oscillating frequency is minimal, but L_s influences the oscillating level. Figure 6 shows the oscillating frequency when the sum of the length of the gate and drain line is varied. L_s is the quarter wavelength of the oscillating frequency. The oscillating frequency is that wherein L_g+L_d becomes a half-wavelength. f_0 is the plotted value when the frequency is converted into half of the free space wavelengths. The experimental value is in agreement with the analytic results. Figure 7 shows the measurement of the oscillating condition with various output ports. Figure 8 shows the current distribution of an analytic result. The location at which the oscillation is unstable or stops is the location at which the current is strongly or weakly distributed in the measurement. Figure 9 shows an active antenna with an oscillator and parasitic element. When this antenna is used as a self-oscillating mixer, the IF level increases upon arranging the parasitic element. Figure 10 shows the effect of the parasitic element on the radiation pattern. The radiation level of 5.4 dB in the $+z$ direction increases in comparison with the case wherein the parasitic element is not present. The IF output level increases as a result of the increase in the receiving levels of RF.

4 Conclusion

An oscillating condition of an active integrated antenna with an oscillator was examined in detail. The voltage source for a coplanar waveguide was proposed, and the length of the gate and drain line decide the oscillating frequency. Future work is the examination of the conversion loss when the transmitting dipole antenna is actually modeled.

Acknowledgement

The authors would like to thank Dr. Kazuhiro Fujimori, Okayama University, for his helpful suggestions regarding FDTD codes.

References

[1] C-N Kuo, B. Houshmand and T. Itoh, "Full-wave analysis of packaged microwave circuits with active and nonlinear devices: An FDTD approach, "*IEEE Trans. Microwave Theory Tech.*, vol. 45, no. 5, pp. 819-826, May 1997.

[2] K. Mori and H. Arai, "Active antenna using a parasitic element, "*IEICE Trans. Commun.*, vol. J82-B, no. 9, pp. 1722-1729, Sept. 1999 (in Japanese).

[3] S. Sakurazawa and H. Arai, "Self-oscillating mixer with electromagnetic coupled antenna element, "*Proceedings of APMC* 2001, vol. 2, pp. 811-814, Taipei, Taiwan, Dec. 2001.

[4] N. Michishita and H. Arai, "FDTD Analysis of an Active Integrated Antenna with Amplifier," The 5th International Workshop on Computational Electromagnetics in Time Domain, pp. 77-81, Halifax, Canada, June 2003.

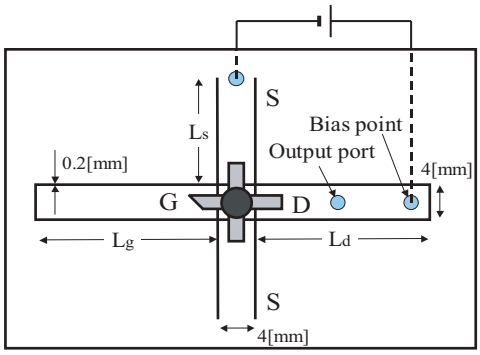

Ls = 25.0 [mm]

Figure 1: Analytic model of active antenna with oscillator

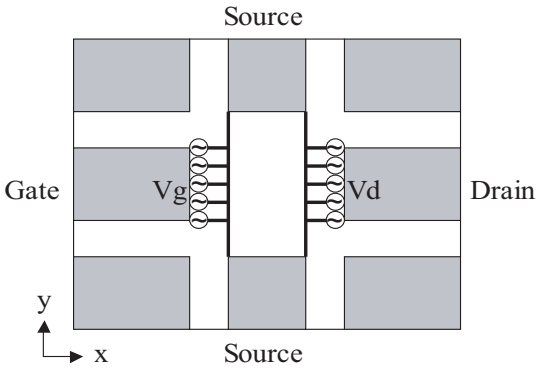

Figure 2: Voltage source for coplanar waveguide

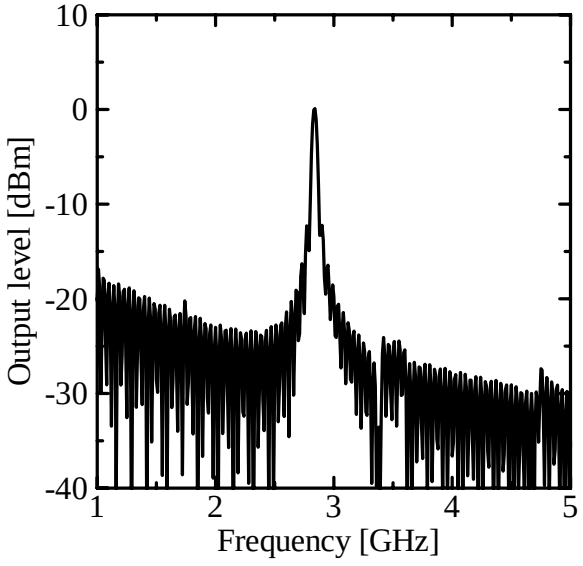

Lg = Ld = 35.0 [mm]

Figure 3: Analytic result of Oscillating frequency

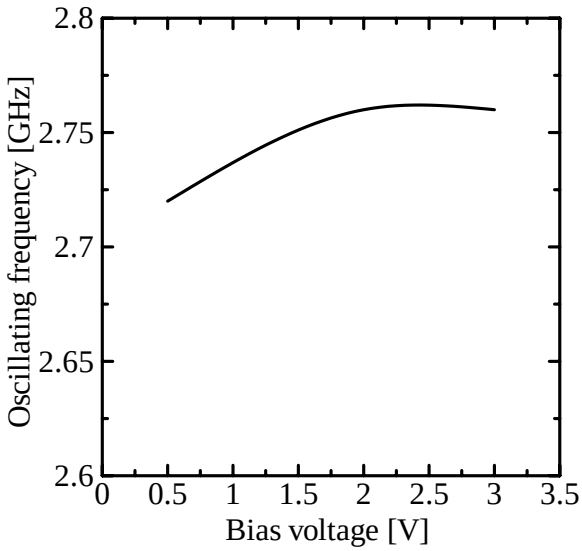

Lg=Ld=35, Ls=25 [mm]

Figure 4: Oscillating frequency when the bias voltage is varied.

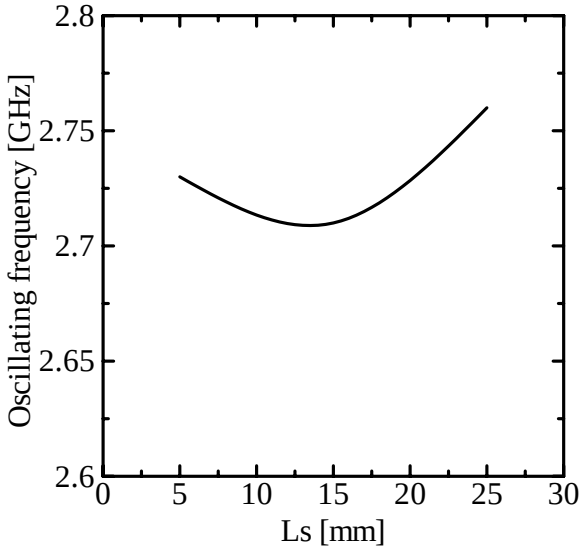

Lg=Ld=35 [mm], Vds=2.0 [V]

Figure 5: Oscillating frequency when L_s is varied.

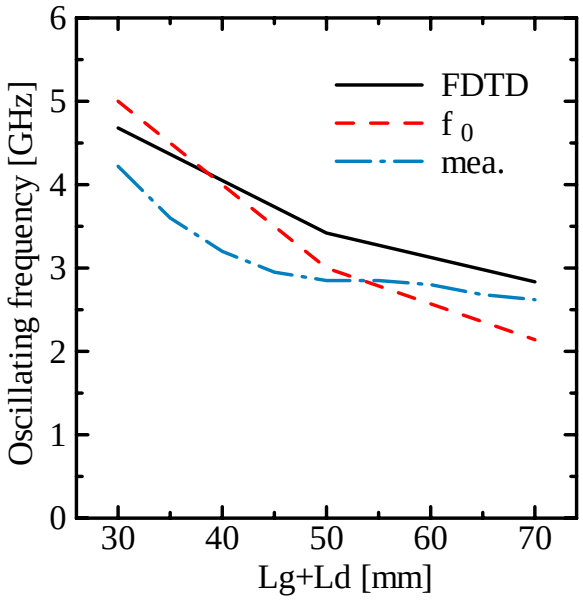

Figure 6: Oscillating frequency when $L_g + L_d$ is varied.

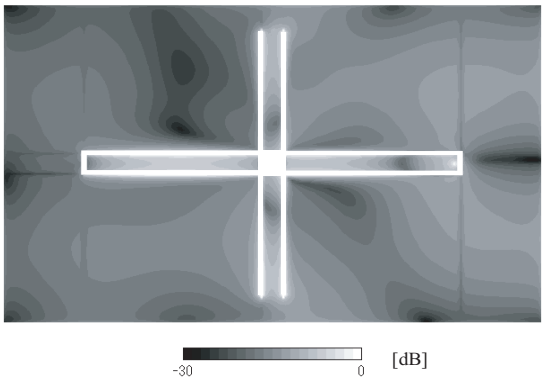

Figure 8: Current distribution of active antenna with oscillator

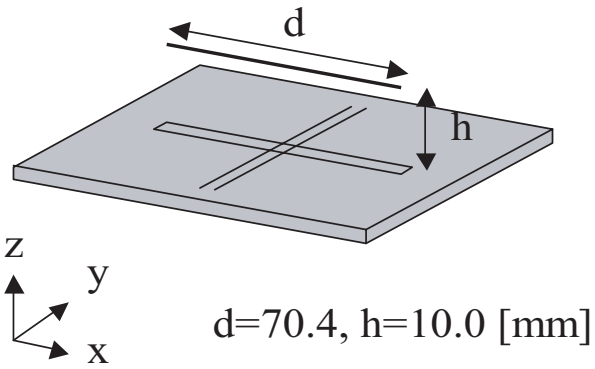

Figure 9: Active antenna with oscillator and parasitic element

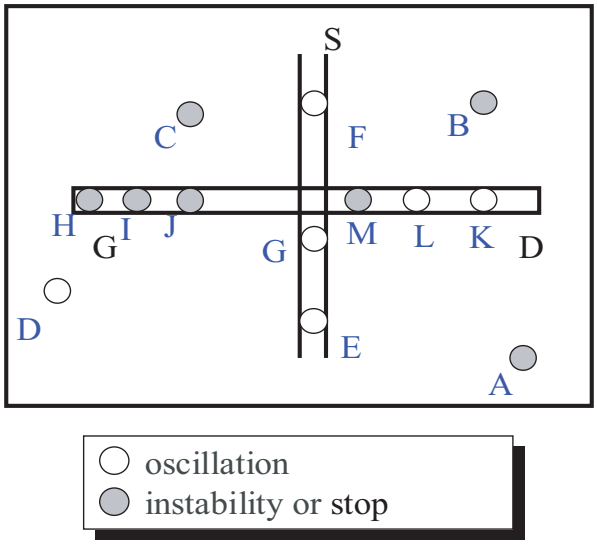

Figure 7: Measurement of oscillating condition

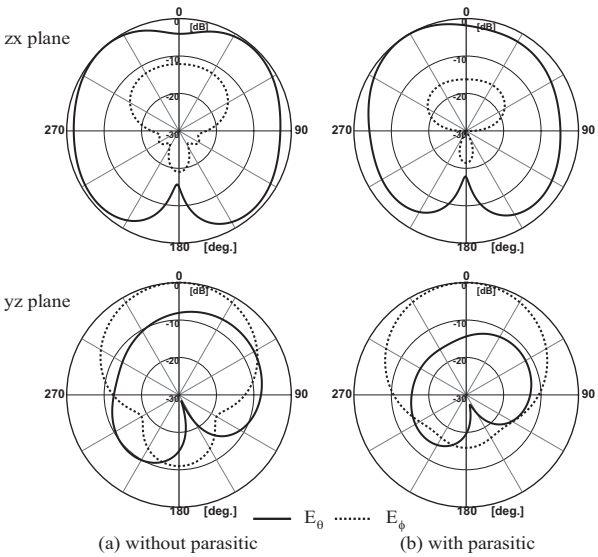

Figure 10: Effect of parasitic element to radiation pattern