2B1-4

Hybridization of Simulation Codes Based on Numerical High and Low Frequency Techniques for the Efficient Antenna Design in the Presence of Electrically Large Structure

#Hsi-Tseng Chou, Heng-Tung Hsu, and Tz-Min Yang
The Department of Communication Engineering, Yuan Ze University
135 Yuan-Tung Rd., Chung-Li 320, Taiwan
E-mail: hchou@saturn.yzu.edu.tw Fax: 886-3-455-4264

1. Introduction

The fast growing of wireless communications has spurred increasing possibility of using antennas under electrically large structures such as cars or aircrafts. Antennas designed directly in the presence of these large structures are thus interested because the overall antenna performance can be relatively considered, which increases the difficulty of antenna analysis and numerical simulation because the sizes of the structures can be extremely large. Note that these problems generally involve with the analysis of small scale interactions within the antenna structure and the large scale propagation predictions due to the antenna radiation within the large structures. Apparently conventional approaches of high or low frequency techniques can not be used alone to treat those antenna design problems.

The hybridization of high and low frequency techniques has been proposed and studied for decades, with most works dedicated to either assist HF techniques in increasing the accuracy to predict the wave propagations within a large structure or LF techniques in reducing the number of unknowns to be solved. In particular, most of the works are related to either scattering problems or radiation problems associated simple antenna structures (such as wire antennas). Not much of the works, especially in terms of publicly available software, can be efficiently applied to general antenna design problems under large structures; especially when antenna design optimization is required with a large number of repeated analysis involved.

To demonstrate the concepts of code hybridization, NEC-BSC™ [1] and CST Studio Suite™ [2] of HF and LF techniques, respectively are selected in the following development. Since CST is an exact full wave solver based on finite integration techniques in time domain (FIT), the accuracy of this work relies on the computation of UTD based NEC-BSC code, which has undergone a certain degree of approximation, and the interaction between these two codes. An interface to decompose the antenna design problems into sub-domains of each code is established and performs the parameter interactions between codes. In particular, the concepts of generalized ray expansion (GRE) method are applied in the interface establishment. The main advantage of the GRE is that the propagation predictions using a ray tracing technique need to be performed only once regardless the antenna types for the same large structure of interest. It is particularly useful for antenna design optimization since during the procedure of optimization each change on the antenna structure is considered as a new antenna analysis.

In the following sections, the implementation strategy will be described in detail. Special treatments of the decomposed sub-domains to be analyzed by individual codes will be described to reduce the errors due to the truncation of sub-domain decomposition. To demonstrate the feasibility and efficiency of the proposed approach, numerical example of analyzing a monopole antenna on the roof of a car is presented. The analysis result using our proposed approach will then be compared to that using direct computation from CST.

ISBN: 978-4-88552-223-9 C3055©IEICE

2. Implementation Strategies

The problem under consideration is an antenna design within a large complex structure as illustrated in Figure 1, where it is assumed that an antenna is designed and installed on a wing's bottom surface in the presence of a jet fighter. The antenna can be a single element or an array to radiate required patterns that fulfil the specified requirements. Thus this antenna design problem exhibits two considerations including the electric characteristics, such as the bandwidth of return loss, and radiation characteristics such as the radiation patterns, axial ratios and cross-polarization levels. The bandwidth of the antennas is primarily affected by small scale wave interactions within the antenna structures. However, the radiation characteristics will be impacted by the propagations of the antennas' radiated fields through the large and complex structures.

The basic implementation process starts from decomposition of the complex problem into HF and LF sub-domains through proper domain decomposition of the structure. While the basic electric characteristics associated with the antennas are taken care of by LF techniques, HF techniques take care of the prediction of propagations of the large structure. The antenna is basically designed in the LF sub-domain and the corresponding field distributions together with the induced currents on the pre-defined virtual boundaries are obtained and transformed into HF sub-domain. Huygen's equivalence principle [3] is then applied with properly assigned enclosures on the virtual boundaries in the HF sub-domain to predict the propagation characteristics of the overall structure.

One issue that needs to be addressed is that possible artificial boundaries might be created during the decomposition process. In such cases, the artificial boundaries may produce extra unwanted reflections or diffractions which certainly will influence the accuracy of the prediction. To remedy this situation, tapered absorbing materials can be introduced at the artificial boundaries to provide a smooth impedance transformation from the edges to the perfect radiation boundary. Theoretically this works fine only at the expense of very dense meshes and thus long computation time in LF sub-domain of calculation since the absorbing materials are usually made of very high dielectric constant materials. In our approach, Perfect Magnetic Layers (PML) approximations are used such that the decomposed edges will coincide with the PML boundaries directly. Therefore, the artificial boundaries do not exist any more and inclusion of absorbing materials in the calculation can be avoided.

This strategy is very classical and seems to be appropriate to solve this problem. However, in practical applications the implementation is not straightforward and easy from an engineer's point of view. First of all, most of the commercial LF codes do not provide induced currents of the antenna structures. Even some do the antenna structures may involve with dielectric materials which makes the accurate determination of such currents difficult. Thus, the radiation of the induced currents may not easily be computed in HF codes either. Secondly the antenna radiation may be significantly impacted by the complex structure. It is very inconvenient for an engineer to manually perform this analysis procedure. Thirdly, and most importantly, it is almost impossible to perform an auto antenna design adjusting to optimize the antenna radiations within the complex structure.

3. Numerical Example

The proposed approach is validated by considering an antenna design in the presence of a car structure, where the antenna is a monopole and mounted on the car's roof for the simplification of demonstration. The structure and its dimensions are illustrated in Figure 2 with the mesh view at a specific plane of interest. To validate the analysis accuracy of this work, the frequency of operation is assumed to be 900 MHz in the mobile communications, which allows the structure analyzable by LF codes, namely CST, alone. Its results will be used as a reference solution for the comparison of accuracy with the solution obtained by the proposed approach.

Since FIT based CST Microwave Studio adopted the explicit algorithm without any matrix inversion process involved, generally it is capable of handling relatively larger problems compared

to other commercially available codes. The whole structure of interest was analyzed in CST and the calculated S_{11} with 3-D farfield radiation pattern are shown in Figure 3. The calculated farfield response will serve as a reference to compare with that calculated by our approach. Figure 4 shows the decomposed structure in LF sub-domain with the defined virtual boundaries to monitor the field distributions.

The magnetic currents are then computed and transformed into HF sub-domain through $\vec{J} = \hat{n} \times \vec{E}$, $\hat{n}$ being the outward normal direction at the corresponding boundary. Figure 5 shows the transformed current distribution at the corresponding location in HF sub-domain to be analyzed by NEC-BSC code. Note that the virtual boundaries in LF sub-domain are now replaced by PEC enclosures in HF sub-domain since we are dealing with magnetic currents. Finally the propagation predictions are performed using BSC code and the resulted farfield pattern is shown in Figure 6 with that calculated directly from CST Microwave Studio included for comparison. Note that only the pattern is of interest for comparison because the value should depend on the choice of observation location. It is clear that the results agree very well with each other, with huge difference in computation time of about 3 minutes using our approach compared to that of 65 minutes using CST.

4. Conclusion

In conclusion, hybridization approach has been applied to the analysis of a monopole antenna mounted on the roof of a car at 900 MHz. The promising results have proven that the proposed approach is very efficient, accurate and capable of performing antenna design in the presence of electrically large platforms. Moreover, the computation time and effort have been greatly reduced using the proposed approach. The proposed approach can be further extended to the optimal antenna designs of the antenna structures or placements through developed automation programs.

Acknowledgments

This work is financially sponsored by National Science Council, Taiwan under contract no. 96-2623-7-155-002-D. The authors would like to acknowledge Nearson Marketing Group (NMG) for support of the simulation software CST Design Studio 2006B.

References

[1] NEC-BSC version 4.2 User's Manual, The Ohio State University, June 2000.
[2] CST Studio Suite 2006B User's Manual, CST Computation Simulation Technology, 2006.
[3] C.A.Balanis, "Antenna Theory", John Wiely & Sons, New Jersey, 2005.

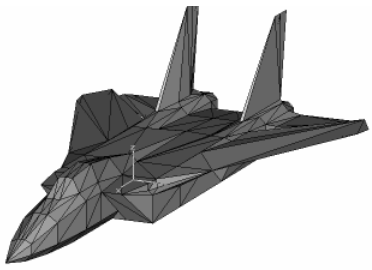

Figure 1: Electrically large and complex structure of interest.

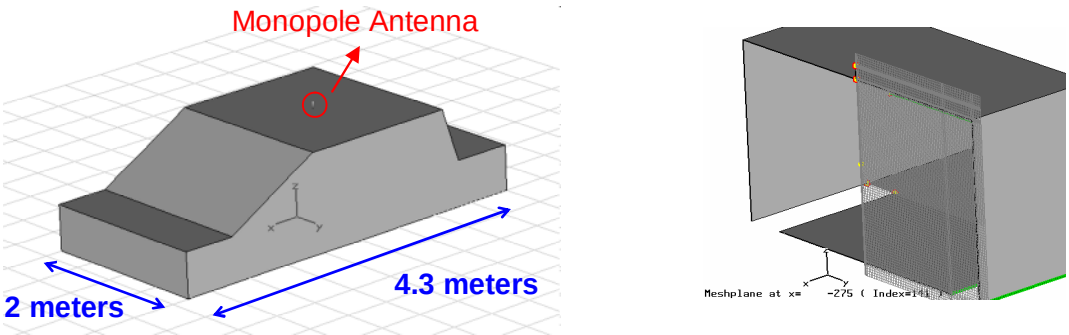

Figure 2: A monopole antenna mounted on the roof of a car to be analyzed in GSM band with the dimensions of the car shown, with the mesh view at a specific plane of interest.

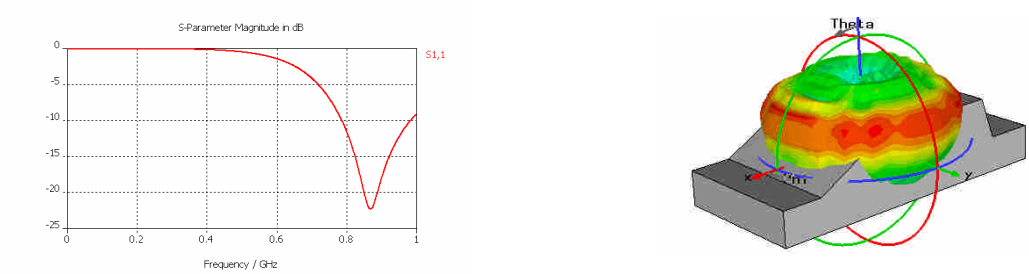

Figure 3: Simulated S_{11} and 3-D farfield radiation pattern of the whole structure in CST.

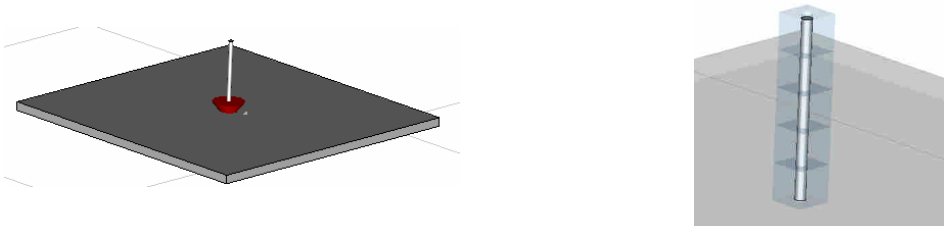

Figure 4: The decomposed structure in LF sub-domain with the defined virtual boundaries

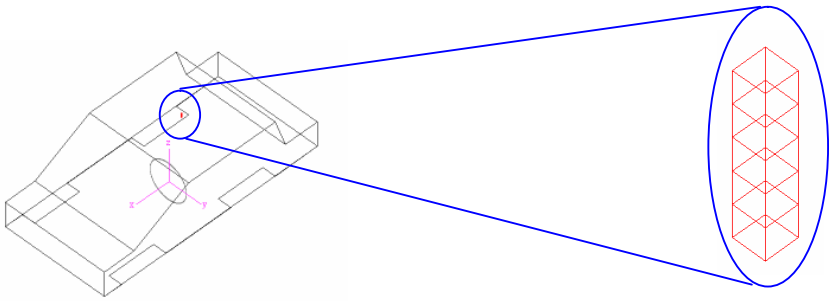

Figure 5: The transformed current distribution at the corresponding location in HF sub-domain to be analyzed by NEC-BSC code.

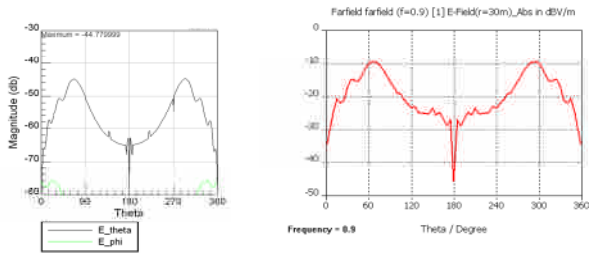

Figure 6: Farfield (E-field) calculated in HF sub-domain using BSC code (left) compared to that from CST (right).