2A4-3

An Experiment on MIMO System having Dual Polarization Diversity Branches

DAS NIRMAL KUMAR* M. SHINOZAWA** N. MIYADAI** T. TANIGUCHI* Y. KARASAWA*
*University of Electro-communications 1-5-1 Chofugaoka Chofu-shi Tokyo, 182-8585 Japan
**Nihon Dengyo Kousaku Co. LTD 3 Takenouchi, Sakado-shi, Saitama, 350-0264 Japan
nirmal@radio3.ee.uec.ac.jp

1. Introduction

In recent years, using adaptive array antennas both at the base station (BS) and mobile station (MS), known as MIMO (Multiple Input Multiple Output) has become a popular research field of next generation mobile communications systems [1]-[2]. The increase of system capacity without increasing the transmitted power or frequency bandwidth has made the MIMO system unique and efficient in data transmission. With the recent development in hardware miniaturization and advances in antenna design in the user units like wireless LAN, the future potentiality of MIMO has been increased significantly. Again, works of Alamouti and Tarokh in the field of space-time coding technology have added a new dimension in MIMO research.

This paper deals with a MIMO system having dual polarization diversity branches. Two orthogonal polarization antenna ports such as horizontal and vertical polarization ports have been constructed on the same patch layer of an antenna element. This new system will make the antenna portion of MIMO smarter and more compact. In multipath-rich environments, it is expected that the dual polarized antenna will work as two independent antennas. This paper shows the performance of the new system through an experiment under the multipath environment.

2. Dual polarization MIMO channel model

Fig.1 illustrates the dual polarization MIMO channel model. As shown in the figure, let the dual polarizations consist of vertical polarization (V) and horizontal polarization (H). The channel state information is expressed by the channel matrix A. Each element of the channel matrix stands for the path amplitude between the corresponding branches.

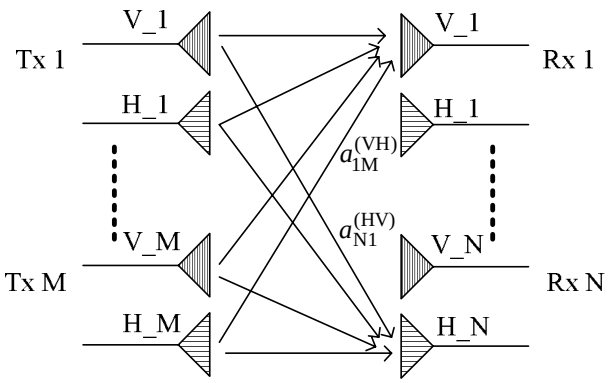

Fig.1. M×N dual polarization MIMO system

$$A \equiv \begin{bmatrix} A^{(VV)} & A^{(VH)} \\ A^{(HV)} & A^{(HH)} \end{bmatrix} \tag{1}$$

$$A^{(QP)} \equiv [\mathbf{a}_1^{(QP)} \mathbf{a}_2^{(QP)} \cdots \mathbf{a}_m^{(QP)} \cdots \mathbf{a}_M^{(QP)}] \tag{2}$$

$$\mathbf{a}_m^{(QP)} \equiv [a_{1m}^{(QP)} a_{2m}^{(QP)} \cdots a_{nm}^{(QP)} \cdots a_{Nm}^{(QP)}]^T \tag{3}$$

(P,Q stands for V or H and $[\ ]^T$ denotes the matrix transpose)

ISBN: 4-88552-206-4 C3055©IEICE

Here, A is the channel matrix of the whole MIMO system having a size of (2M×2N). Each element of matrix A is again a matrix of path amplitude between the specific polarization branches. Here, the suffix (QP) denotes a certain polarization branch (V or H) of receive antenna and a certain polarization (V or H) branch of transmit antenna respectively. $A^{(QP)}$ is the channel matrix of path amplitude between the receive polarization branch Q and transmit polarization branch P having a size of (M×N). And the column vector of the matrix $A^{(QP)}$ is given by $\mathbf{a}_m^{(QP)}$ having a length equal to the number of receive antenna elements. It should be noted that for having a clear image of orthogonal polarizations we used V and H. However, the polarizations at transmitter and receiver are not necessary to be of same kinds but to be orthogonal in each side.

The SVD (Singular Value Decomposition) analysis of the channel matrix A is given by

$$A = E_r D E_t^H = \sum_{i=1}^{M_0} \sqrt{\lambda_i}\, \mathbf{e}_{r,i} \mathbf{e}_{t,i}^H \tag{4}$$

$$D \equiv \mathrm{diag}[\sqrt{\lambda_1}\ \ \sqrt{\lambda_2}\ \cdots \sqrt{\lambda_{M_0}}] \tag{5}$$

$$E_t \equiv [\mathbf{e}_{t,1}\ \mathbf{e}_{t,2} \ldots \mathbf{e}_{t,M_0}] \tag{6-a}$$

$$E_r \equiv [\mathbf{e}_{r,1} \mathbf{e}_{r,2} \ldots \mathbf{e}_{r,M_0}] \tag{6-b}$$

$$M_0 \equiv \min(2M, 2N) \tag{6-c}$$

where H denotes the complex conjugate transpose. λ_i is the i-th eigenvalue of the hermitian matrix AA^H or $A^H A$. $\mathbf{e}_{t,i}$ is the eigen vector belongs to λ_i derived from $A^H A$ and the same way $\mathbf{e}_{r,i}$ is the eigen vector belongs to λ_i derived from $A^H A$. This MIMO system possesses M_0 number of independent virtual channels and each channel has a power gain of λ_i. Power gain of the MIMO channels varies according to the magnitude of the corresponding eigenvalue.

As mentioned above, the number of independent MIMO channels directly depends on the number of transmit and receive antennas. The number of independent channels M_0 in a conventional single polarization MIMO system is min(M,N) while that in the new system of dual polarization is min(2M,2N).

3. MIMO Eigenmode Transmission

Estimation of channel state information (CSI) before transmission of data is the most important part of MIMO communication system. MIMO transmission techniques can be divided roughly in two kinds considering whether the CSI is known at both transmitter and receiver such as eigenmode transmission technique, or only at the receiver such as space-time coding transmission. Transmission of independent signals through the parallel MIMO channels is called Eigenmode Transmission. To transmit i-th signal through the i-th parallel eigenpath, i-th SVD weight vector ($\mathbf{e}_{t,i}, \mathbf{e}_{r,i}$) pair are used both at the transmitter and receiver respectively. Thus, the output signal is derived by

$$\begin{aligned} \mathbf{r}(t) &= E_r^H \{A E_t \mathbf{s}(t) + \mathbf{n_0}(t)\} \\ &= D\mathbf{s}(t) + \mathbf{n}(t) \end{aligned} \tag{7}$$

where $\mathbf{n}_0$ denotes the additive white Gaussian noise (AWGN) vector generated in each receive antenna. And $\mathbf{n}$ denotes the AWGN noise vector after combining the branches at the receiver.

4. Experimental setup of dual polarization MIMO system

Fig.2 illustrates the dual polarization MIMO system. For sending necessary data from receiver to transmitter, two PCs which are controlling the whole system connected via LAN cable. In the transmitter, the I,Q signal data generated in PC are converted to the analog baseband signals by the D/A converter. Then, baseband signals are modulated by IF signal (70MHz) in IQ modulator and up-converted to 2.185GHz for final transmission from the different antennas.

At the receiver, the received signals are down-converted and I-Q-detected. Then, the I-Q-detected signals are stored in the PC through A/D converter for further signal processing. The detail about the MIMO experimental system is described in Ref. [3].

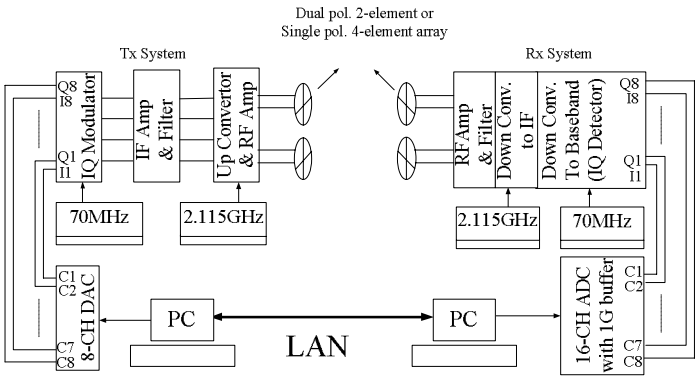

Fgi.2. Configuration of the dual polarization MIMO experiment system

5. Experiment Results

The performance of the dual polarization MIMO is investigated through experiments under the multipath-rich environment. The experiment has been carried out in a radio anechoic chamber. As shown in Fig.3, multipath environment is created inside the chamber by arranging a number of 1m×2m reflecting boards covered with aluminum foils. The transmit and receive antennas are kept at a distance of 4m.

The MIMO channels are measured as a function of frequency. To obtain the channel characteristics, the career frequency is scanned within the receiver's frequency range of 2.17 to 2.20GHz (bandwidth of 30MHz). In this experiment ,BPSK signals modulated by 8-bit Walsh codes are sent from transmit antennas to obtain channel state information.

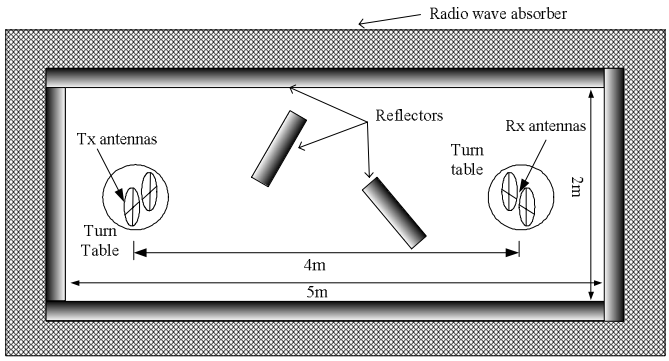

Fig.3. MIMO channel measurement in multipath environment.

Fig.4 shows the frequency characteristics of eigenvalues for4×4MIMO system in a multipath environment. Median values of λ_1 ~ λ_4 for dual polarization system are -17.96dB, -21.52dB, -26.08dB and -30.92dB respectively, while those for single polarization system are -17.98dB, -20.91dB, -25.19dB and -32.71dB. The results prove that the performance of dual polarization MIMO system is almost same comparing to the single polarization MIMO.

The performance of the 4×4MIMO is also investigated in a anechoic environment. The result is shown in Fig.5. The result shows that comparing to single polarization system, the dual polarization MIMO produces two channels of almost equal strength.

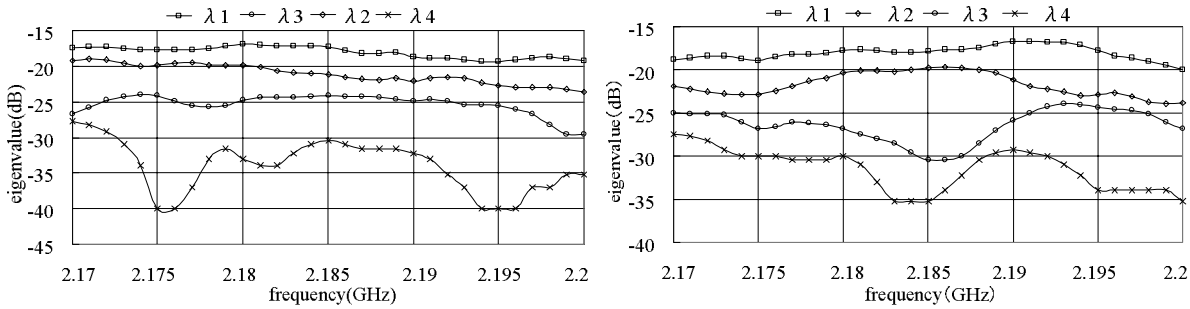

(a) Dual-polarization system (M=N=2) (b) Single-polarization system (M=N=4)

Fig.4. The eigenvalues of 4×4MIMO as a function of frequency in multipath environment

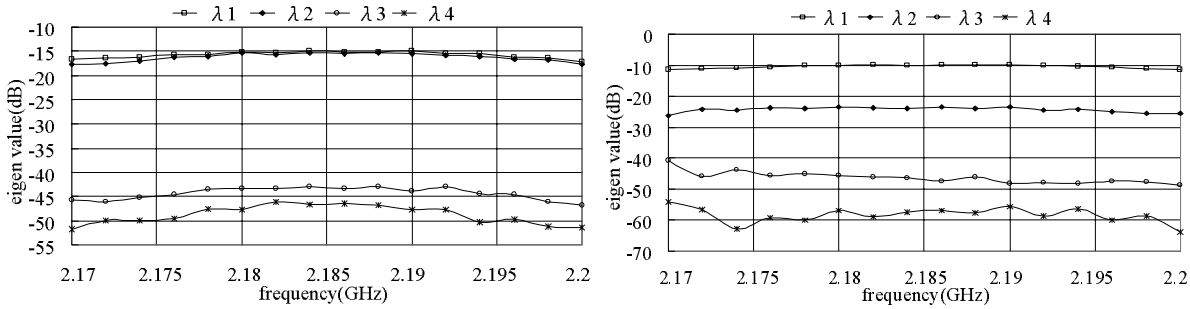

(a) Dual-polarization system (M=N=2) (b) Single-polarization system (M=N=4)

Fig.5. The eigenvalues of 4×4MIMO as a function of frequency in anechoic environment

Finally, the MIMO eigenmode transmission in multipath environment is investigated for both dual polarization and single polarization MIMO systems. 4 different BPSK signals are transmitted using four SVD weights (eigenvectors). The constellation of the output signals are derived as shown in Fig.6. This result also shows that the performance of dual polarization and single polarization MIMO is almost same.

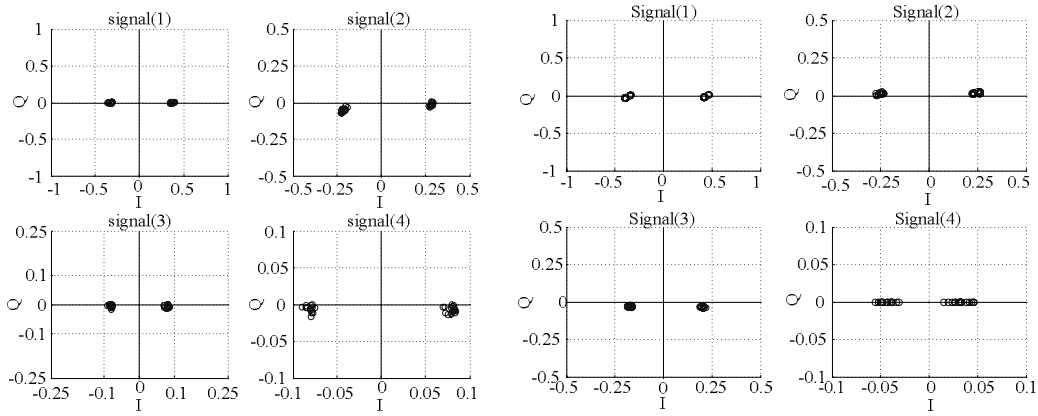

(a) Dual-polarization system (M=N=2) (b) Single-polarization system (M=N=4)

Fig.6. Constellation of received signal for MIMO eigenmode transmission (BPSK,f=2.185GHz)

6. Conclusions

This paper has demonstrated that the performance of a dual polarization MIMO system in multipath environment is almost same comparing to that of single polarization MIMO system having the same number of diversity branches. The dual polarization system is characterized by compactness so that it uses only the half number of antenna elements comparing to that of a conventional one. That is why we strongly suggest the suitability of dual polarization antennas with MIMO for next generation wireless communications.

References

[1] G.J.Foschini,"Layered space-time architecture for wireless communication in a fading environment when using multi-element antennas," Bell Labs. Tech. Jour., pp. 41-59, Aug. 1996.

[2] K. Wong, R.S. Cheng, K.B. Letaief, and R.D. Murch, "Adaptive antennas at the mobile and base stations in an OFDM/TDMA systems," IEEE Trans., Vehicul. technol., vol. 49, 1, pp. 195-206, 2001.

[3] DAS, Theodorus, M.Shinozawa, N.Miyadai, T.Taniguchi, Y.Karasawa, "Development of a MIMO System having a Function of Space and Polarization Diversity,"IEICE Technical Report, AP2003-63,pp133-138,2003-07.