Wide-band Slot Antenna for WLAN Application

W. Kueathawikun[1], P. Thumwarin[1], N. Anantrasirichai[1], and T. Wakabayashi[2]
[1] *ReCCIT, Faculty of Engineering, King Mongkut's Institute of Technology Ladkrabang (KMITL)*
Ladkrabang, Bangkok, 10520, Thailand
Tel : +662-7392382; E-mail : kanoppin@kmitl.ac.th
[2] *School of Information Science and Engineering, Tokai University, Hirasuka, Kanagawa, 259-1292, Japan*
E-mail: wakaba@dt.u-tokai.ac.jp

Abstract

This paper presents coplanar waveguide (CPW) fed slot antenna. A rectangular slot antenna is excited by a 50 ohm CPW with L-shaped tuning stub. It can achieves wide band from 2.0 GHz to 6 GHz which is the frequency band covered the standard IEEE 802.11a/b/g for use in WLAN (Wireless Local Area Network) and covered the WiMAX (Worldwide Interoperability for Microwave Access, 2-6 GHz). The characteristics of antenna are proposed and analyzed for instance input impedance, return loss, bandwidth, VSWR, and far field radiation patterns. The antenna is analyzed by using Finite-Difference Time-Domain (FDTD) Method. A verification of our simulation procedure is confirmed by comparing IE3D software which is based on the Method of Moments (MOM).

1. INTRODUCTION

Microstrip antenna is one type of antennas which can be used for transmitting and receiving signals. Microstrip or printed antennas are low profile, small size, light weight and widely used in wireless and mobile communications, as well as radar applications. Microstrip antennas can be divided into two basic types by structure, namely microstrip patch antenna and microstrip slot antenna [1-3]. The slot antennas can be fed by microstrip line, slot line and CPW [4-6]. In this paper, we proposed the slot antenna fed by CPW at a designed frequency of 2.4 GHz and coverage frequency band between 2-6 GHz respectively. This antenna is designed on RT/Duroid 5880 substrate with thickness of 1.575 mm and dielectric constant (ε_r) of 2.2. The antenna is analyzed by using Finite-Difference Time-Domain (FDTD) [7-8] Method and confirmed by compared with IE3D software which is based on the Method of Moments (MOM) [9].

2. ANTENNA STRUCTURE

Fig.1, shown the structure of microstrip slot antenna on the ground plane by CPW-fed on a substrate of dielectric constant 2.2. The coplanar waveguide (CPW) is designed to be 50 ohms in order to match the characteristic impedance of transmission line.
The guide wavelength is given by

$$\lambda_g = \frac{c/f}{\sqrt{\varepsilon_{eff}}} \tag{1}$$

Where ε_{eff} is an effective dielectric constant which can be computed by using the following equation.

$$\varepsilon_{eff} \approx \frac{\varepsilon_r + 1}{2} \tag{2}$$

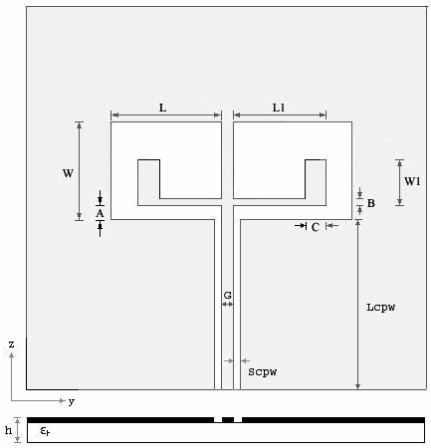

Fig. 1: Structure of microstrip slot antenna fed by CPW.

The parameters in structure of this antenna are

L = 27 mm
L1 = 22.5 mm
W = 23 mm
W1 = 18 mm
A = 0.3 mm
B = 0.3 mm
C = 4.2 mm
G = 3 mm
S_{cpw} = 0.3 mm

In this case, size of slot antenna in horizontal and vertical is 54 mm (2L) and 23 mm (W), respectively.

3. SIMULATION RESULTS

The CPW-fed line is designed with the conductor gap G of 3 mm and slot gap S_{cpw} of 0.3 mm corresponding to the characteristic impedance of 50 ohms transmission line. The antennas are analyzed by using Finite-Difference Time-Domain (FDTD) Method. A verification of our simulation procedure is confirmed by comparing with IE3D software which is based on the Method of Moments (MOM). The proposed design can be further enhanced by adjusting width of slot A, conductor stub C and B. In this paper, we will show the effect of adjusting three parameters by fixing the value of other parameters: L, L1, W, W1, G, and S_{cpw} as shown in section 2.

A. Effect of Adjusting Width of Vertical Stub C

In this case, we will adjust width of vertical stub C to 3 mm, 3.6 mm, 4.2 mm and 4.8 mm. The simulation results of return loss (S_{11}) in four adjusting are shown in Fig. 2. It is shown that the good matching is at stub C = 4.2 mm.

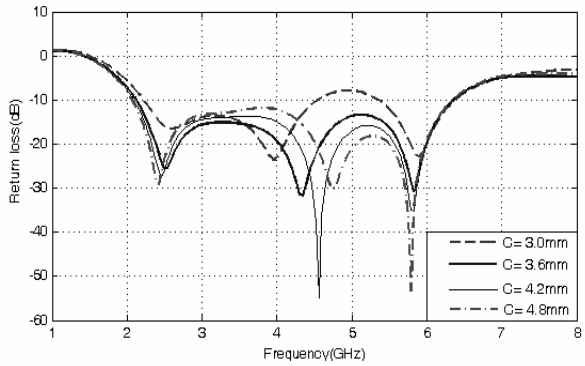

Fig. 2: The return loss in the case of adjusting C.

B. Effect of Adjusting Width of Horizontal Stub B

By using C = 4.2 mm and adjusting stub B to 0.3 mm, 0.6 mm, 0.9 mm, and 1.8 mm. The simulation results for all of adjusting are shown in Fig. 3.

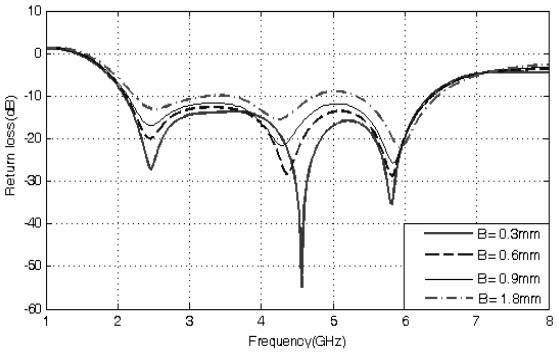

Fig. 3: The return loss in the case of adjusting B.

C. Effect of Adjusting Width of Slot A

For finding good matching in wideband, we will set the value of C = 4.2 mm and B = 0.3 mm, and adjusting width of slot A to 0.3 mm, 0.6 mm, 0.9 mm, and 1.8 mm The simulation results of return loss (S_{11}) are shown in Fig. 4.

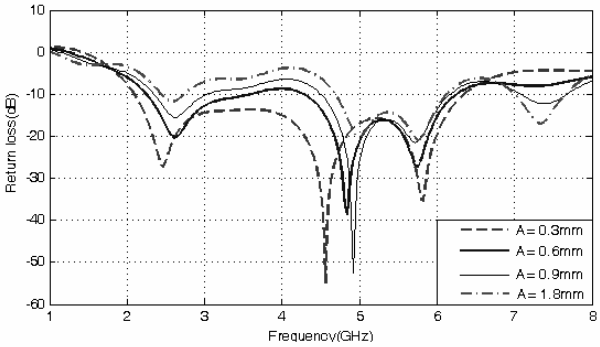

Fig. 4: The return loss in the case of adjusting A.

D. Characteristic of Return Loss

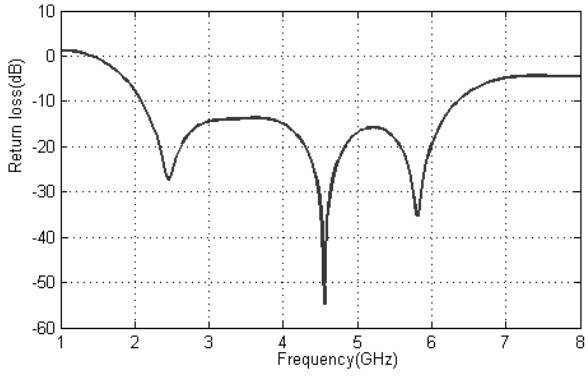

(a) FDTD

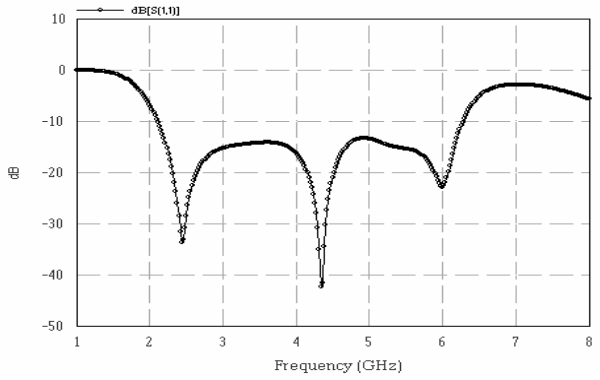

(b) MOM

Fig 5: S_{11} parameter of slot antenna fed by CPW

We investigate the effect of adjusting three parameters on four values in order to analyze the wideband coverage IEEE 802.11a/b/g WLAN applications and WiMAX (2-6 GHz). Finally, we choose A= 0.3 mm, B = 0.3 mm, and C = 4.2 mm for good matching in wideband. In this case, the comparison in characteristic of return loss S11 from FDTD software and IE3D software is shown in Fig. 5. It is shown that the frequency band and maximum bandwidth coverage at 2.06 - 6.35 GHz by using FDTD method and MOM.

The return loss or reflected loss (S_{11}) is a parameter of antenna for represents the reflected wave return from load. This parameter is given as follows:

$$S_{11} = \frac{\Im\left[V_{ref}(t)\right]}{\Im\left[V_{inc}(t)\right]} e^{2\gamma L} \tag{3}$$

When $\Im$ represents a Fourier Transform and L is the length between an observing point and a reference point. The propagation constant γ can be defined by

$$\gamma = \alpha + j\beta \tag{4}$$

Where α and β are attenuation and phase constant, respectively.

E. Characteristic of Input Impedance

The input impedance Z_{in} is the complex number, which fined out by using the parameter S_{11} and characteristic impedance Z_0 of the microstrip line. The equation for the input impedance is given as follow:

$$Z_{in} = \left[\frac{\left(1+S_{11}\right)}{\left(1-S_{11}\right)}\right] Z_0 \tag{5}$$

The characteristic of input impedance for wideband slot antenna is shown in Fig. 6.

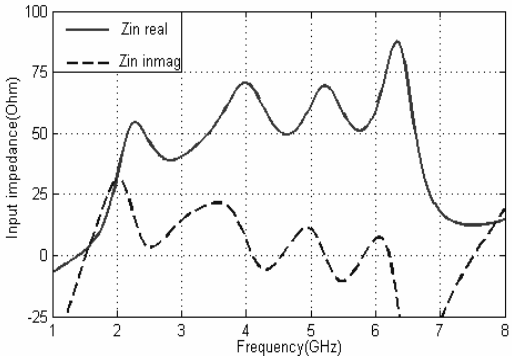

Fig 6 : The input impedance of slot antenna fed by CPW

F. Characteristic of VSWR

Fig. 7, is shown the voltage standing wave ratio (VSWR) of this antenna. The maximum of VSWR in wideband is about 1.5 at frequency 3.6 GHz. The bandwidth of this antenna is considered from S_{11} at –10 dB or VSWR at 2.0. The maximum impedance bandwidth is 4.29 GHz covered frequencies from 2.06 GHz to 6.35 GHz.

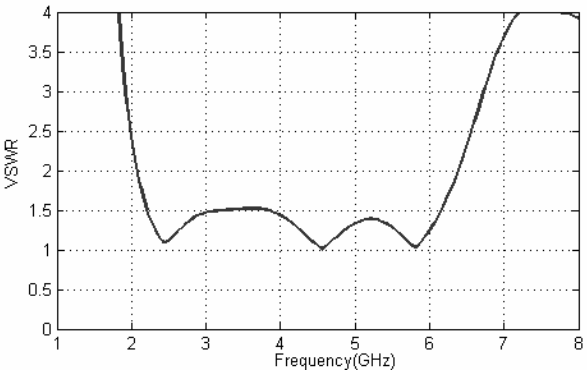

Fig 7: VSWR of slot antenna fed by CPW

G. Radiation Patterns

In this paper, the radiation patterns of this slot antenna at 2.4 GHz and 5.2 GHz are shown in Fig. 8 and Fig. 9, respectively.

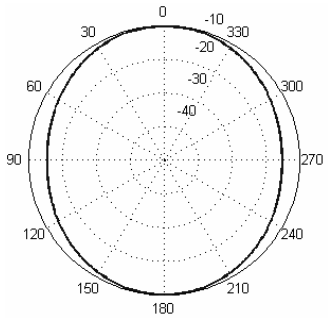

(a) xy-plane

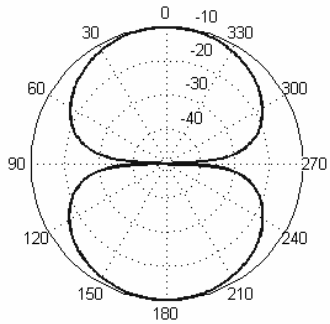

(b) xz-plane

Fig 8 : Radiation patterns of slot antenna fed by CPW at 2.40 GHz

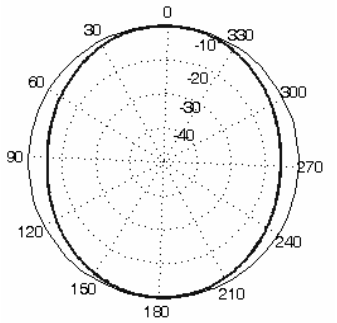

(a) xy-plane

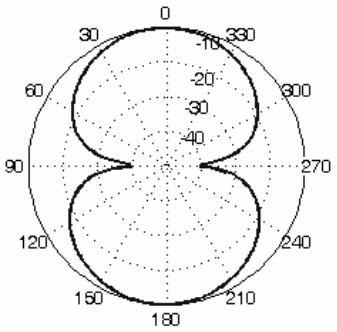

(b) xz-plane

Fig 9 : Radiation patturns of slot antenna fed by CPW at 5.20 GHz

4. CONCLUSION

The slot antenna fed by CPW with tuning stub L-shaped as shown in Fig. 1, can achieve wideband coverage the standard IEEE 802.11a/b/g (2.4 - 2.485 GHz,5.15-5.35GHz) and WiMAX (2.3-5.9 GHz) for WLAN.

ACKNOWLEDGEMENT

The authors would like to thank Rajamanggala University of Technology Thanyaburi Pathumtanee. Thailand, for support the IE3D User Manual Release 10, Zeland Software.

REFERENCES

[1] F.A. Benson and T.M. Benson, *Fields Waves and Transmission Lines*, Chaman & Hall, 1991.

[2] Constantine A. Balanis, *Antenna Theory Analysis and Design*, John Wiley & Sons, Inc., 1997.

[3] Ramesh Garg, Prakash Bhartia, Inder Bahl and Apisak Ittipiboon, Microstrip Antenna Design Handbook, Artech House, Inc., 2001.

[4] Laurent Giauffret, Jean-Marc Laheurte, A. Papiernik, "Study of Various Shapes of the Coupling Slot in CPW-Fed Microstrip Antenna," *IEEE Trans. Antennas Propagat*, Vol. 45, No. 4, pp. 642-647, 1997.

[5] Alpesh. U. Bhobe, Christopher L. Holloway, "Wide-Band Slot Antennas With CPW-Feed Line: Hybride and log-periodic Design," *IEEE Trans. Antennas Propagat*, Vol. 52, No. 10, pp. 2545-2554, 2004.

[6] Angelopoulos, E.S. Stratakos, Y.E. Kostaridis, A.I.Kaklamani, D.I.; Uzunoglu, N.K., "Multiband miniature coplanar waveguide slot antennas for GSM-802.11b and 802.11b-802.11a wireless applications", *Wireless Communications and Networking,vol.* 1,pp.103-108,2003

[7] Yongxi Qian and Tatsuo Itoh, FDTD Analysis and Design of Microwave Circuits and Antennas Software and Application, Realize Inc., 1999.

[8] Allen Taflove, Computational Electrodynamics The Finite-Difference Time-Domain Method, Artech House, Inc., 1995.

[9] *IE3D User Manual Release*. 10, June 2003. Zeland Software.