AN ADAPTIVE ARRAY ANTENNA STEERED BY IF LOCAL SIGNAL PHASE SHIFTERS FOR K-BAND BROADBAND WIRELESS ACCESS BASE STATION

Shuichi OBAYASHI, Osamu SHIBATA, Hideo KASAMI, Hiroki SHOKI, and Yasuo SUZUKI
Corporate Research and Development Center, Toshiba Corporation
1, Komukai-Toshiba-cho, Saiwai-ku, Kawasaki, 212-8582, Japan
E-mail shuichi.obayashi@toshiba.co.jp

1. Introduction

Adaptive arrays for broadband wireless access base stations are currently being considered as a promising means to enhance subscriber capacity [1]-[6]. The transmission speed for broadband wireless access systems are significantly higher than personal communication systems (PCS) to which the adaptive arrays are partly applied [7].

Digital beam forming is being eagerly explored for application to PCS on account of its flexibility, but it will be difficult to apply to the high-speed systems, because the digital signal processing (DSP) and analog-to-digital converters (ADCs) require huge resources and power consumption. A pattern updating method with input vectors that are sparsely acquired to reduce the signal processing load [3] is proposed for wireless access systems with low mobility. But, very fast and power-consuming ADCs, which sample the modulated signals with a sufficiently higher rate than the signal baud rate, as well as a DSP circuit which weights and combines the outputs sampled by the ADCs are still required for real-time reception.

Conventional phased arrays, on the other hand, utilize phase shifters through RF or IF signal lines. The phase shifters are usually both bulky and expensive. Digital phase shifters are preferred for computer-based control, but the signal attenuation becomes larger and the noise figure is degraded as for the conventional type, if the number of bits increases to achieve precise control.

The authors have proposed an adaptive array steered by IF local signal phase shifters [2]. Figure 1 shows a typical configuration based on the proposal. An adaptive array as a radio receiver usually requires two or more frequency conversion stages to achieve the sensitivity performance. The phase shift and the frequency shift of the signal from each antenna element can be simultaneously accomplished at the down conversion stage by the phase-controlled local signal. The configuration can avoid the additional loss or noise with the received signal due to the phase shifter itself, and the ordinary commercial quadrature modulator IC for mobile communication can be utilized for the CW local phase shifter. The adaptive array does not require the high-speed digital signal processing sections. Also, it utilizes only one fast ADC in the digital demodulator for the composed output signal, not for all input vectors. A concern may be that LMS (Least Mean Square) or other adaptive algorithms, which require input vectors, cannot be used straightforwardly with this configuration. However, some algorithms to be used with the configuration have also been proposed for broadband fixed wireless access (FWA) (e.g. [8]).

In this paper, we introduce a prototype operated in the K-band with the proposed configuration. The details of the adaptive array prototype as well as the beam pattern measurement results are described.

2. K-band Adaptive Array Steered by IF Local Phase Shifter

Figure 2 is a photograph of the prototype and Figure 3 shows its functional configuration. The operating radio frequency is in the 26-GHz band. The prototype is composed mainly of three parts: a microwave unit, a main unit and a control board.

A planar array (Figure 4) is installed on the front of the microwave unit. Note that the array has eight subarrays; only half are shown in Figure 3 due to space restriction. The interval between the subarrays is designed to be 5.66 mm (0.5 λ at 26.5 GHz). The subarray [9] has two tapered slot elements fed by a coplanar waveguide and slot lines. The

array is vertically polarized. The signal received by each subarray is amplified and down-converted to the first IF signal (900-MHz band) by a mixer in the microwave unit, and output to the main unit. The first IF local signal is fed from a general microwave signal generator.

The main unit comprises several functional IF components: an IF local signal divider, IF local signal phase shifters, IF down converters, variable amplifiers, a combiner for second IF signals (100-MHz band), and filters. The phase shift and the frequency shift of the first IF signals from individual subarrays are simultaneously accomplished at the IF down converters and the IF local signal phase shifters. The local signal phase shifter uses a commercial quadrature modulator IC for PCS terminals (Figure 5). When two DC signals are input for I and Q of the quadrature modulator, the CW local signal with the required phase can be derived. The baseband circuits for I and Q have sufficiently large operating bandwidth of 40 MHz or more, in order to switch from a certain phase-shift to another within 1 μs. The variable amplifiers are used to compensate the gain difference between the subarrays. The functional IF components are mounted on three printed circuit boards (PCBs) with digital-to-analog converters to control some of the IF components. These PCBs, a CPU board, a digital I/O interface, a GP-IB interface, and the bus rack where the boards are inserted, are adopted Compact PCI, which is a popular embedded system bus standard. Some I/O devices (e.g. a mouse and an LCD) are connected to the CPU board. The second IF local is supplied by a general RF signal generator.

The control board receives the commands which, for example, initiate a booting sequence or specify one of the operating modes, from the CPU board through the digital I/O interface, and controls both the phase-shifts by the IF local signal phase shifters and the gains of the variable amplifiers.

3. Operating Modes for FWA base stations

The adaptive array currently has three operating modes:

(1) Manual mode: Arbitrary phase weights for individual subarrays can be set from the console for the CPU board. Beam patterns with fixed phase weights are measured, as shown in the following section, under the manual mode.

(2) Terminal registration mode: The sketch is shown in Figure 6(a). The array scans its beam from -40 to +40 degrees based on the boresight while monitoring the receiving signal strength indicator (RSSI), detects the best beam that has the largest RSSI output, and stores the ID of the best beam in a database. This mode assumes the registration of a newly installed FWA terminal. By the sequence of the mode, an FWA base station with the adaptive array can register the terminal with the beam ID for the terminal to the subscriber database.

(3) Communication mode (Figure 6(b)): The array scans its beam in accordance with a certain sequence of the beam IDs specified by the CPU board. The communication mode supposes the reception of TDMA bursts from individual FWA terminals located in various directions. In a typical FWA, a base station allocates the timing and the length of TDMA communication bursts to individual terminals, and informs to the terminals about them. Thus, the adaptive array can receive every TDMA burst from each terminal, as the array is also informed of the burst timing and its length by the base station.

4. Beam Pattern Measurement Result

Beam patterns of the adaptive array with fixed phase-weights were measured in an anechoic chamber. A horn antenna against the array radiated 25.5 GHz CW. The distance between the horn antenna and the linear array on the microwave unit installed on a positioner was 3 meters. The strength of the combined signal was measured with respect to the azimuth angle. A 10-MHz reference signal was shared by three CW signal generators for the first and second IF local signal for the array as well as the transmitted CW signal, to keep the frequency stability.

Figure 7 shows two typical beam patterns derived from the measurement. The phase shifts were set so that the signals of the array elements from each azimuth direction of +10 degrees or -20 degrees were cophased. The worst error in the beam direction was 2

degrees, but most of the errors were less than 1 degree through the beam steering between -40 and +40 degrees. The measured results and the calculation, where the measured element patterns were used and the equal amplitudes from the subarrays were assumed, showed good agreement. The slight degradation in the sidelobes is assumed to have been caused by the IF signal coupling in a PCB in the main unit. The coupling is expected to become reduced by modification of the PCB pattern.

4. Summary

A K-band adaptive array prototype steered by IF local signal phase shifters was manufactured for high-speed FWA. The IF local signal phase shifters were made with ordinary quadrature modulator ICs and will contribute to realize a cost effective adaptive array for high speed wireless communication systems. The prototype worked under the three operating modes by which an FWA base station can specify an appropriate beam for each terminal and receive individual TDMA bursts from terminals. The measurement results showed that good beam patterns and beam scanning performance were accomplished.

Some adaptive algorithms proposed by the authors (e.g. [8]), which adaptively direct some nulls as well as a main beam, are going to be verified by the prototype.

Reference

[1] J-Y Lee and H. Samueli, "Adaptive Antenna Arrays and Equalization Techniques for High Bit-Rate QAM Receivers," IEEE J. of Selected Areas in Communications, Vol. 17, No. 4, pp677-688, Apr. 1999.

[2] S. Obayashi, S. Hiroki, O. Shibata, H. Kasami, S. Otaka, H. Tsurumi, and Y. Suzuki, "An Adaptive Array for High Speed Wireless Local Loop Steered by Local Signal Phase Shifters," 1999 IEEE Antennas and Propagation Symposium, Orlando, FL, pp1436-1439, July 1999.

[3] Y. Takatori, K. Cho, K. Nishimori, and T. Hori, "Improving Transmission Performance Using Smart Antennas for High-speed Wireless Access Systems", The 10th International Symposium on Personal, Indoor and Mobile Radio Communications (PIMRC '99), Osaka, Japan, C8-14, Sept. 1999.

[4] K. Sheikh, D. Gesbert and A. Paulraj, "Smart Antennas for Broadband Wireless Access Networks," IEEE Communications Magazine, Vol. 37, No. 11, p100, Nov. 1999.

[5] Y. Okada, H. Tsuji, H. Kagiwada, and A. Sano, "Millimeter-wave Broadband Wireless Access System with Tracking Technology of Moving Targets," 48th IEEE Vehicular Technology Conference (VTC '98), Ottawa, Canada, pp 2057-61, 1998.

[6] K. Ito, S. Obayashi and H. Shoki, "Reverse Channel Interference Suppression by an Adaptive Array for Wideband Fixed Wireless Access," 2000 IEICE General Conference, B-5-276, Mar. 2000 (in Japanese).

[7] Special issue on Smart Antennas, IEEE Personal Communications, Vol. 5, No. 1, Feb. 1998.

[8] H. Kasami, S. Obayashi, H. Shoki, and Y. Suzuki, "A constrained power minimization algorithm of a phased array for Ka-band wireless local loops," accepted to The IEEE Annual Vehicular Technology Conference (VTC 2000), Tokyo, Japan, May 2000.

[9] O. Shibata, H. Shoki, and Y. Suzuki, "CPW Fed Tapered Slot Antenna with a Large Beam-Width", 1999 IEICE General Conference, B-1-86, Mar. 1999 (in Japanese).

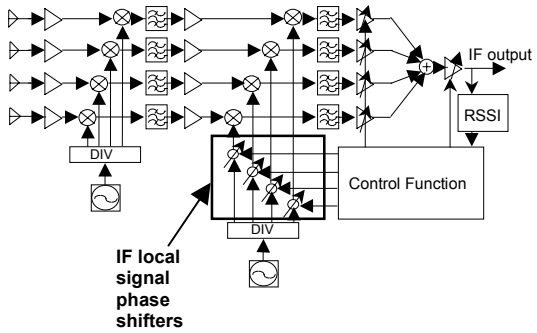

Fig. 1 Typical configuration of adaptive array steered by IF local phase shifters

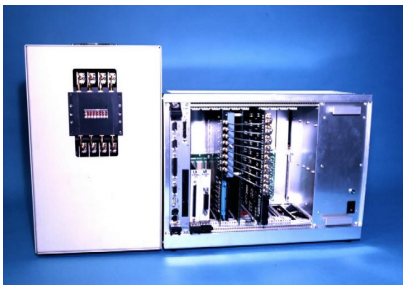

Fig. 2 26-GHz band adaptive array prototype for wideband fixed wireless access base station

Fig. 4 26-GHz band array utilizing E-plane tapered slot subarrays

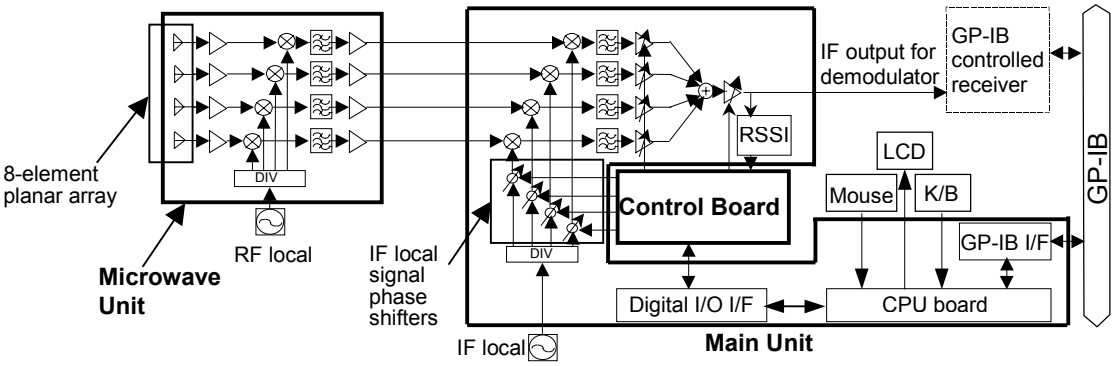

Fig. 3 Functional configuration of the adaptive array prototype steered by IF local phase shifters (Note that the array has eight subarrays while only half are shown due to space restriction.)

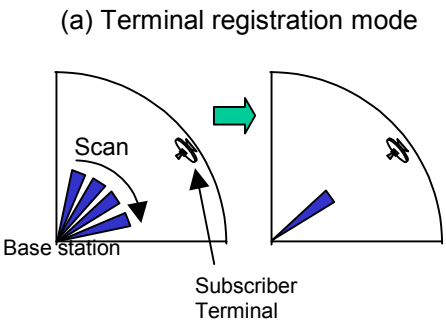

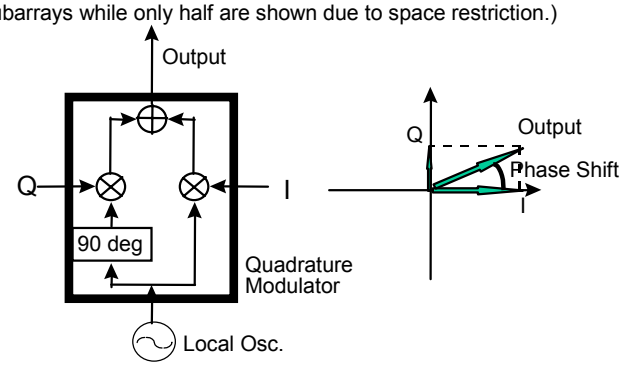

Fig. 5 An IF local signal phase shifter utilizing a quadrature modulator IC

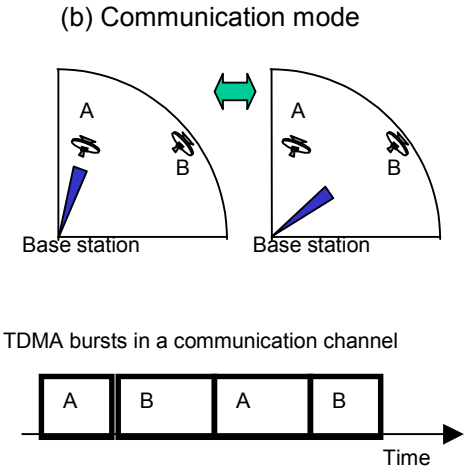

Fig. 6 Operating modes for FWA base station

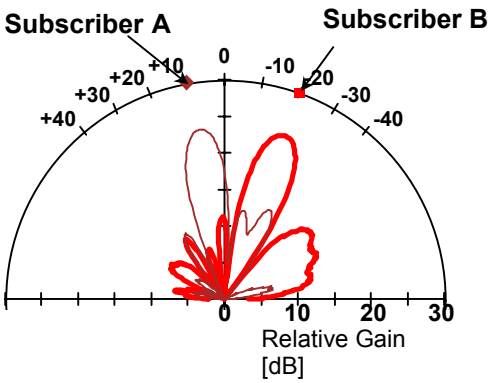

Fig. 7 Measured patterns of steered beams