Suppression of Microwave Oven Interference in WLAN Systems Using Adaptive Filters

Masanobu Nakatsuka, Yasushi Matsumoto, Katsumi Fujii, Akira Sugiura
RIEC, Tohoku University, 2-1-1, Katahira, Aoba-ku, sendai, 980-8577, Japan
E-mail: ymatsu@riec.tohoku.ac.jp

Abstract: Since WLAN (Wireless LAN: IEEE802. 11b) systems shares the 2.4 GHz frequency band with microwave ovens, interference caused by the radiated noise from the ovens is a serious problem. This paper proposes the use of adaptive filters to suppress the microwave oven interference in DS-SS (Direct Sequence Spread Spectrum) WLAN links. This method is based on the fact that an oven noise can be regarded as a CW-like interference in a short duration. In contrast to the conventional suppression techniques for oven noises, this method can be implemented without any changes of the specifications of currently used WLAN systems. The results of numerical simulations clearly demonstrate the effectiveness of the method for improving the bit error rate of the WLAN links interfered by oven noises.

Key words: *adaptive filter, WLAN, microwave oven, ISM band, spread spectrum, EMI*

1. Introduction

Recently, WLAN (Wireless LAN) systems in the 2.4GHz band have come into widespread use. However, it is well known that electromagnetic noises emitted from microwave ovens may seriously degrade the performance of WLAN links.

Various techniques have therefore been examined to improve the quality of wireless link interfered by oven noises. For example, using the Class-A impulsive noise model, an optimum receiver was proposed, but BER (Bit Error Rate) was hardly improved in real oven interference environment [1]. It is because statistical noise models like the APD do not provide any information on the waveform of oven noises, which is actually a train of periodic bursts. Another proposed method was the use of interleaving technique to eliminate the effect of burst interference [1]. A drawback of this method is the necessity of a very deep interleave (about 10msec) because the repetition rate of the noise bursts is equal to the ac mains frequency (50 or 60Hz). Recently, the use of a multi-code transmission scheme [2] and an adaptive multi-code system [3] were proposed. Although the multi-code systems are considered to be effective in oven noise environment, they are not compatible with the specifications of currently used WLAN systems.

The authors of this paper found out that a microwave oven noise could be modeled with frequency-modulated tone-bursts [4]. Since an oven noise can be assumed as a CW in the symbol duration, we propose the use of adaptive filters in DS-SS (Direct Sequence Spread Spectrum) WLAN receivers in order to reduce the oven interference. A major advantage of this method is that it has complete compatibility with currently used WLAN systems, because adaptive filters can be implemented without any changes in WLAN specifications such as modulation scheme, spreading code, and packet format.

2. Microwave oven noise model

As described in [4], an oven noise waveform can be expressed as an AM-FM model,

$$I(t) = I_0 U\big(V(t)\big)\exp\left(j\left(2\pi f_0 t + 2\pi f_{\max}\int_{-\infty}^{t} V(\tau)d\tau\right)\right) \quad (1)$$

Note that f_0 (around 2.45GHz) and $f_{\max}$ (typically from 10 to 40 MHz) are the center frequency and the maximum frequency deviation of the FM, respectively. $V(t)$ is the normalized magnetron driving voltage. I_0 is constant amplitude and the phase is uniformly distributed in [0, 2π]. The nonlinear function U with a threshold V_0 is given by

$$U(V) = \begin{cases} V & (V \geq V_0), \\ 0 & (V < V_0). \end{cases} \quad (2)$$

The magnetron driving voltage is represented by

$$V(t) = \begin{cases} \cos 2\pi f_v t & \text{for transformer-types,} \quad (3a) \\ \left|\cos 2\pi f_v t \cos 2\pi f_s t\right| & \text{for inverter-types.} \quad (3b) \end{cases}$$

Equation (3a) is applied to the microwave ovens in which the ac mains voltage is supplied directly to a magnetron through a step-up transformer (transformer-type ovens). Equation (3b) corresponds to the ovens that have an inverter circuit followed by the step-up transformer (inverter-type ovens). In (3), the ac mains frequency and the switching frequency are denoted by f_v(50 or 60 Hz) and f_s (typically from 20 to 30 KHz), respectively. From (1) and (3), the frequency variation of oven noise in the symbol duration of WLAN (1μs) can be estimated to be 10 kHz for the transformer-type, and up to 10 MHz for the inverter-type oven.

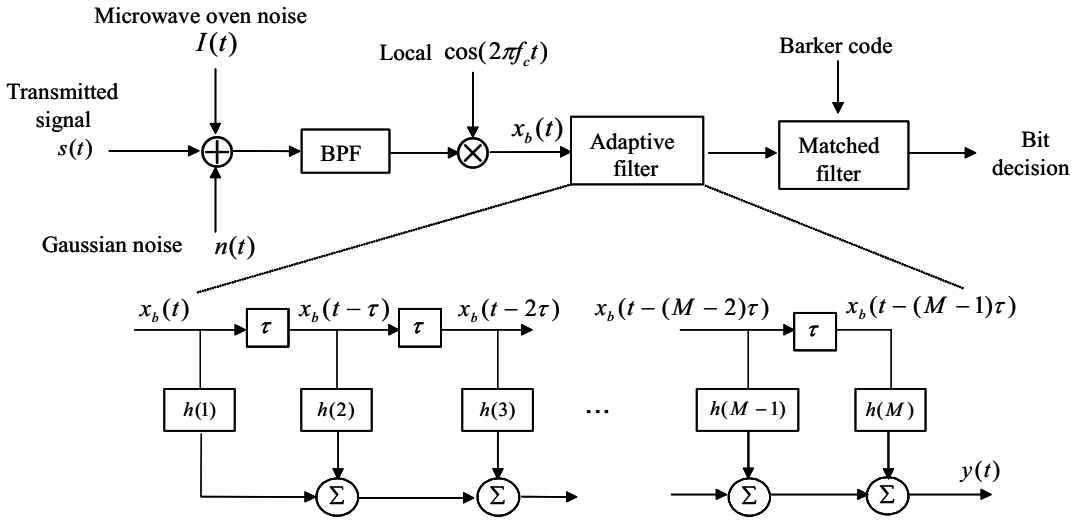

Fig.1 WLAN receiver with an adaptive filter

In actual wireless receivers, the interfering oven noise is band-limited with a receiving filter(s). If the receiver bandwidth is sufficiently wide, the band-limited noise waveform $I_{BPF}(t)$ can be approximated as [4]

$$I_{BPF}(t) \cong I(t) H_{BPF}\left(f_0 + f_{\max} V(t)\right) \qquad (4)$$

where $H_{BPF}(f)$ represents the transfer function of the filter.

3. System Model

WLAN (IEEE802.11b) systems employ a DS-SS scheme as shown in Table I. The system model of WLAN receiver with an adaptive transversal filter is shown in Fig.1. In the present analysis, we deal with the most fundamental transmission mode, that is, 1 Mbps, BPSK spread by Barker code, and assume an ideally synchronized system.

Table I Major specifications of IEEE802.11b WLAN.

Transmission rate	1 or 2 Mbps (Barker code) 5.5 or 11 Mbps (CCK)
Chip rate	11 Mcps
Primary modulation	DBPSK, DQPSK
Spreading code	Barker code Complementary code

The receiver input, the SS signal, microwave oven noise, and Gaussian noise, are band-limited with the BPF and are down-converted into the base band. The base band component $x_b(t)$ is given by

$$x_b(t)=s_b(t)+I_b(t)+n_b(t) \qquad (5)$$

where $s_b(t)$, $I_b(t)$, and $n_b(t)$ represent the SS signal, the oven noise, and the Gaussian noise, respectively.

Then the base band component is sampled and inputted into the adaptive filter. The sampling interval τ is set to 1/4 of the chip duration, considering the frequency variation of the inverter-type oven noises mentioned previously.

Adaptation of tap weight

The output of the adaptive filter $y(t)$ is expressed as

$$y(t) = \sum_{i=1}^{M} h(i) x_b(t-(i-1)\tau) \,. \qquad (6)$$

The adaptive tap weights $h(i)$ (i=1 to M) are optimized to minimize the mean square error ε defined by

$$\varepsilon = E[\{s_b(t) - y(t)\}^2] \qquad (7)$$

where $s_b(t)$ and $y(t)$ denote the desired signal and the filter output, respectively [5].

The optimum tap weights vector $\boldsymbol{h}_0$ is given by

$$\boldsymbol{h}_0=\boldsymbol{R}^{-1}\boldsymbol{p} \,. \qquad (8)$$

In (8), $\boldsymbol{R}$ denotes the autocorrelation matrix of the filter input $x_b(t)$, and $\boldsymbol{p}$ represents the correlation vector between $x_b(t)$ and the desired signal $s_b(t)$. If the signal and noises are uncorrelated, vector $\boldsymbol{p}$ becomes the autocorrelation vector of the signal $s_b(t)$. The element of $\boldsymbol{R}$ and $\boldsymbol{p}$ are defined by

$$r_{ij}=E[x_b(t-(i-1)\tau)\, x_b(t-(j-1)\tau)] \ (i, j = 1 \text{ to } M), \qquad (9a)$$

$$p_i=E[s_b(t)s_b(t-(i-1)\tau)] \quad (i = 1 \text{ to } M). \qquad (9b)$$

Since the autocorrelation function of a DS-SS signal with PSK modulation is known, optimum weight $\boldsymbol{h}_0$ can be determined if the autocorrelation matrix $\boldsymbol{R}$ is obtained.

Practically, the elements of the autocorrelation matrix $\boldsymbol{R}$ must be estimated by averaging the product $[x_b(t-(i-1)\tau)x_b(t-(j-1)\tau)]$ over a finite duration T_{av}. If the interfering noise is stationary, accurate $\boldsymbol{R}$ can be obtained with T_{av} increased, and hence appropriate tap weights can be determined. However, in the case of fluctuating noises like microwave oven noise, the performance of the adaptive filter may degrades as the averaging duration T_{av} increases, because the amplitude and frequency of the oven noise change rapidly and remarkably.

For the same reason, recursive adaptive algorithms such as LMS cannot sufficiently reduce the interference of inverter-type oven noise because of their poor tracking abilities. In this paper, the tap

weight $\boldsymbol{h}_0$ is determined from (8) with directly calculating the inverse matrix of $\boldsymbol{R}$ for every chip duration.

Table II Parameter of microwave oven noise.

Microwave oven type	Transformer-type	Inverter-type
Center frequency: f_0	2.420 GHz	2.422 GHz
Frequency deviation: f_{max}	43 MHz	40 MHz
Threshold voltage: V_0	0.3	0.3
AC mains frequency: f_v	50 Hz	50 Hz
Switching frequency: f_s	—	25 kHz

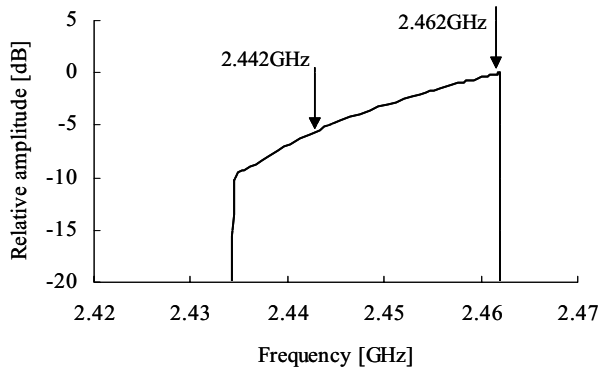

Fig.2 Channel frequencies and oven noise spectrum. (inverter-type microwave oven)

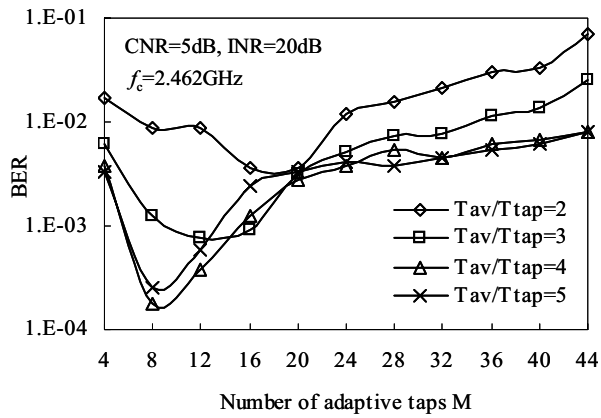

Fig.3 Dependence of the interference suppression performance on the number of adaptive taps. (inverter-type microwave oven noise)

4. Numerical Simulation

Simulation's conditions

Numerical simulations were conducted with oven noise parameters shown in Table II. The *INR* (Interference to Noise power Ratio) is defined as the ratio of the peak oven noise power $|I_0|^2/2$ to the Gaussian noise power N within the receiving band. Transmitting and receiving filters were assumed to be a root role-off filter with a roll-off factor $\alpha = 1$.

The spectrum of oven noise assumed in the simulation is schematically illustrated in Fig.2. In the figure, the channel frequencies of WLAN signal are

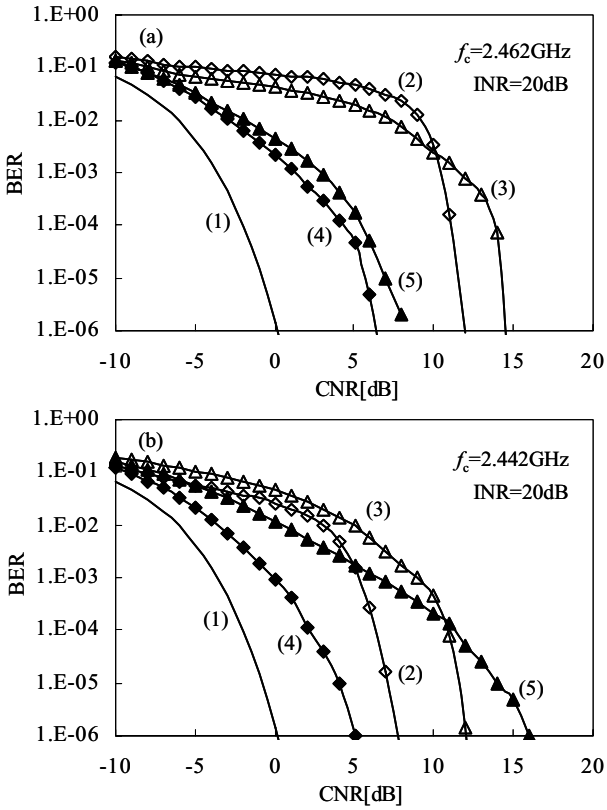

Fig.4 BER performances.
(1) AWGN
(2) Transformer-type oven noise (without adaptive filter)
(3) Inverter-type oven noise (without adaptive filter)
(4) Transformer-type oven noise (with adaptive filter)
(5) Inverter-type oven noise (with adaptive filter)

also shown. As reported in [6], the performance of adaptive filters in DS-SS systems strongly depends on the rate of frequency variation of interfering CW [6]. At the channel frequency of 2.462GHz, the amplitude of interfering oven noise becomes maximum and frequency variation rate becomes minimum. For 2.442 GHz, the peak amplitude of the oven noise is lower than that for 2.462 GHz, while the frequency variation rate becomes greater.

As mentioned in the previous section, the number of taps M and the average duration T_{av}, must be carefully determined considering the trade off between the accuracy of the tap weight and the tracking ability of the filter.

In order to find the optimum T_{av} and M, BER was evaluated as shown in Fig.3 for the inverter-type oven noise. The minimum BER is obtained at M=8 and $T_{av}/T_{tap}=T_{av}/(M\tau)$=4.

Results and discussions

With the optimum filter parameters (M=8, T_{av}=4$M\tau$), the BER characteristics evaluated for different channel frequencies are shown in Fig.4 as a function of *CNR*.

At the channel frequency of 2.462 GHz, the BER is remarkably improved by the adaptive filtering as

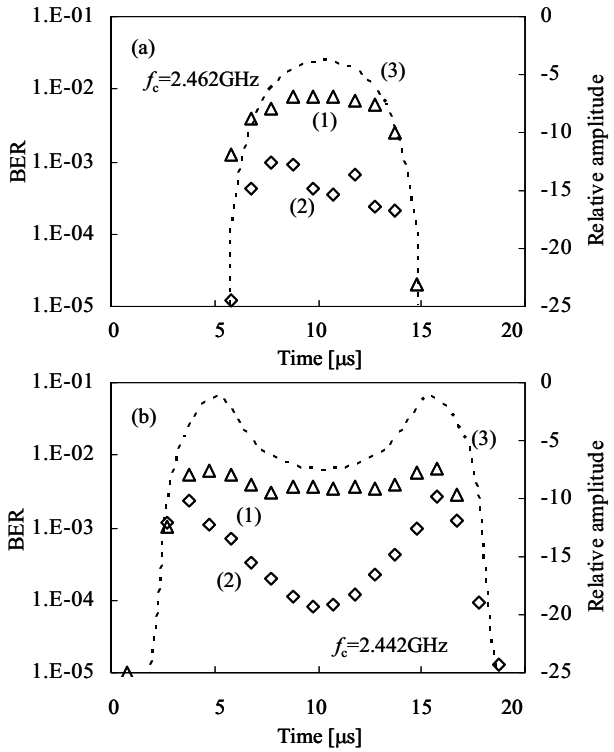

Fig.5 Bit error probability and average noise amplitude in the repetition period of the inverter-type oven noise. (CNR=0dB, INR=20dB)

(1) Bit error probability (without adaptive filter)
(2) Bit error probability (with adaptive filter)
(3) Average oven noise amplitude

shown in Fig.4(a). In the case of 2.442GHz shown in Fig.4(b), BER is successfully improved for the transformer-type oven noise. In contrast, only slight improvement in the BER is expected for the inverter-type oven noise.

In order to discuss the dependence of the BER improvement on the channel frequency, time variation of the bit error probability was calculated as shown in Fig.5.

In this figure, the horizontal axis represents the time in a repetition period of the inverter-type oven noise, namely 20 μs=1/(2*25 kHz). The time variation of bit error probability is plotted with the average envelope amplitude of the oven noise inputted to the adaptive filter.

At the frequency of 2.462 GHz, BER without the adaptive filter becomes maximum at t=10 μs when the noise amplitude reaches the peak value as shown in Fig.5(a). By applying the adaptive filter, the BER at around 10 μs is successfully reduced because the frequency variation rate of the oven noise is minimum at this instance.

At 2.442 GHz, as shown in Fig. 5(b), the oven noise has the peak amplitude at t=4 μs and 16 μs. At these instances, the frequency variation of the oven noise is much faster than that at t=10 μs. The fast frequency variation of the noise results in the insufficient reduction of BER.

5. Conclusion

The use of adaptive filters was proposed in DS-SS WLAN receivers in order to reduce the microwave oven interference in the 2.4 GHz band. Improvement in BER characteristics was evaluated with numerical simulations by using a time-domain noise model of microwave oven. The results clearly demonstrated the effectiveness of the proposed method. Transformer-type oven noises can be suppressed very successfully. However, for inverter-type oven interference, BER improvement depends on the channel frequency, because the frequency variation rate of the interfering oven noise changes greatly with the frequency.

References

[1] H. Kanemoto, S. Miyamoto, N. Morinaga, “Modeling of Microwave Oven Interference Using Class-A Impulsive Noise and Optimum Reception,” IEICE Trans. Commun., vol. E80-B, No.5, pp. 670-677, May. 1997.

[2] S. Unawong, S. Miyamoto, N. Morinaga, “EMI Suppression Technique for ISM-Band WLANs Using Multicode Transmission and EMI Observation Channel,” IEICE Trans. Commun., vol. E83-B, No.3, pp. 532-540, March. 2000.

[3] K. Watanabe, S. Miyamoto, N. Morinaga, “Performance of 2.4GHz-band Wireless LAN Systems using Adaptive Multi-code Transmission Technique”, IEICE, Vol. J85-B, No.12, pp. 2209-2222, Dec. 2002.

[4] Y. Matsumoto, M. Takeuchi, K. Fujii, A. Sugiura, Y. Yamanaka, “A Time Domain Microwave Oven noise Model for 2.4-GHz Band,” IEEE Trans. EMC, vol.45, No.3, pp.561-566, Aug. 2003.

[5] S. Haykin, Introduction to Adaptive Filters, Macmillan, 1984.

[6] S G. Glisic, A. Mammela, V-P. Kaasila, M D. Pajkovic, “Rejection of Frequency Sweeping Signal in DS Spread Spectrum Systems Using Complex Adaptive Filters,” IEEE Trans. Commun., vol. 43, pp. 136-145, Jan. 1995.