A-3-3

AN ADAPTIVE ARRAY WITH A PREBEAMFORMER

Koji KOMIYAMA and Kazuaki TAKAO
Department of Electrical Engineering, Kyoto University, Japan

Presence of coherent noise has been a serious problem to almost all types of adaptive array system since their principle of operation absolutely depends on the non-correlation between the desired signal and interference or noise.

This paper proposes an addition of a prebeamformer to the DCAA(Directionally-constrained adaptive array) system in order to enable the system to eliminate the interference which is correlative with the desired signal. As has been discussed before[1], the DCAA works on the guideline to minimize the output power while maintaining a constant transfer function to the signal from the desired direction, so that it may achieve the maximum signal-to-noise ratio at its output port.

Fig.1 shows the general structure of a conventional adaptive array processor. Now, the inputs $X_1 \sim X_{KL}$ and variable weights $W_1 \sim W_{KL}$ are expressed in the form of column vectors, X and W, respectively, then the optimum weight is given by

$$W_{opt} = R_{xx}^{-1}C(C^T R_{xx}^{-1}C)^{-1}H \qquad (1)$$

where $^{-1}$ and ^{T} show the inverse and transpose of the matrix, respectively, and

$$R_{xx} = E(X \cdot X^T) \qquad (2)$$

denotes the correlation matrix of the input, where E means the expectation. C and H are the constraint matrix and constrained output vector with respect to the specified(desired) direction, respectively. They are related with

$$C^T W = H \qquad (3)$$

when the system operates on the sampling feedback, W_{opt} is asymptotically approached with the algorithm,

$$W_{j+1} = P(W_j - \mu Xy) + F \qquad (4)$$

where the suffix j denotes the value at j-th sampling; P and F are projection matrix and fundamental vector, respectively, both of which are derivable from C and H; μ is the step size which corresponds to the feedback loop gain.

The malfunction resulting from the correlation between the desired signal and interference will be understood by Fig.2. When the interference N is coherent with the desired signal S (such as in the case of radar clutter or TV-ghost), they are vectorically additive and forms $S+N$ in the figure, which results in the false weight of W_{fls} that is orthogonal to $S+N$. It should be noted that W_{fls} still remains in the constraint plane, satisfying the constraint condition. After all, S is cancelled by N with the false manipulation of the variable weight of the system who just follows the given guideline of DCAA. It should also be noted that this phenomenon is common among any type of MSN(maximum signal-to-noise ratio) adaptive array, but that LMS(least mean

square error) adaptive array also suffers from malfunction that $S+N$(not pure S) tends to follow the reference signal.

Back to Fig.2, the optimum weight can be attained if S is eliminated from the feedback system since W_{opt} is orthogonal to N. Fig.3 shows an adaptive array with a prebeamformer that is designed to achieve this role. The right half of this figure is the single channel of a conventional adaptive array with two taps per channel (narrow band operation is assumed). The left half is the proposed prebeamformer that consists of a pair of antennas and a hybrid. Two antennas are aligned so that the baseline points to the direction of the desired signal. Their spacing d_p is chosen to be quarter-wavelength and the output from the forward antenna is delayed by τ_p. Two signals X_B and X_F are fed to the hybrid, which in turn produces their sum X_P and difference X_M as its two outputs. By virtue of the designed arrangement mentioned above, X_M does not contain S component. Now, this X_M is used in the control loop (the lower part of the figure), which achieves the optimum weight W_{opt}. The upper part of the figure is the signal-flow channel and takes X_P(which contains S component) as its input. The weights of this channel copy those of the control loop and realize W_{opt}. Strictly speaking, the optimum weight thus obtained is not perfect because of the difference of the directional characteristics of X_P and X_M. However, the design parameter given above, especially end-fire structure and small spacing, can minimize the effect.

A computer simulation experiment was carried out on this proposed system of four pairs of antennas. The desired signal and coherent interference are assumed to come from $\theta=0°$ and $60°$, respectively. Their relative intensity is 1:10. Fig.4(a) is the initial pattern and Fig.4(b) is the optimum pattern attained through adaptation. The result shows that a null was generated in the direction of the interference.

The introduction of the above mentioned prebeamformer brings about favorable effects on the performance of the adaptive array even if the interference is not coherent with the desired signal as in the conventional cases. The elimination of the desired signal component from the input to the control loop reduces the fluctuation of SNR at stationary state since the deterioration used to result mainly from the product of the sampled instantaneous values of S and N.

The elimination of S in X_M somewhat spreads to the neighborhood of the desired direction. This helps to solve another problem in DCAA, i.e. mis-estimation of the angle of arrival. In such case, the system generally takes the for interference and tries to nullify it. With the prebeamformer, however, the input from the near-by direction about the desired one is greatly reduced so that the malfunction can be avoided for quite a large margin of allowable error in estimation.

Conclusion. An adaptive array thus described is found to be useful in
(1) the case of coherent interference,
(2) improving the stationary state performance,
(3) increasing the tolerance for mis-estimation of the direction of the desired signal

In practical case where the source of desired signal is moving, each pair must have small-scaled rotator individually, and track mechanically. The whole array structure, however, need not mechanically move, but its beam can be scanned electrically. Therefore the tracking speed should not become so serious

a problem.

Acknowledgement. The authors wish to thank Prof. I. Kimura and his group for general discussion. They are also grateful to Mr. M. Fujita for useful advice.

Reference.

[1] TAKAO,K., FUJITA,M., NISHI,T., "An Adaptive Antenna Array under Directional Constraint", IEEE Trans. Vol.AP-24, No.5, pp.662-669 (1976)

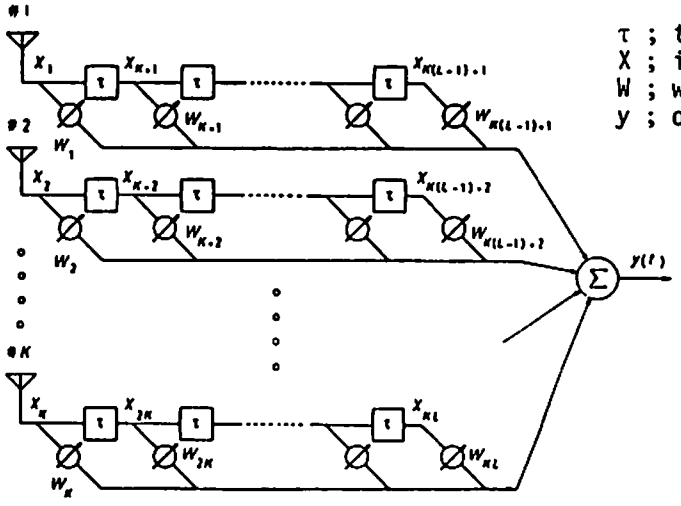

Fig.1 Adaptive array system

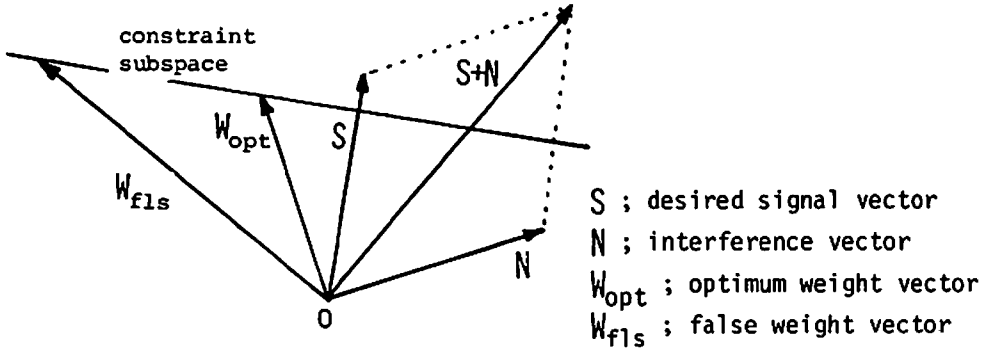

Fig.2 Vectorial expression of the system response to the coherent interference

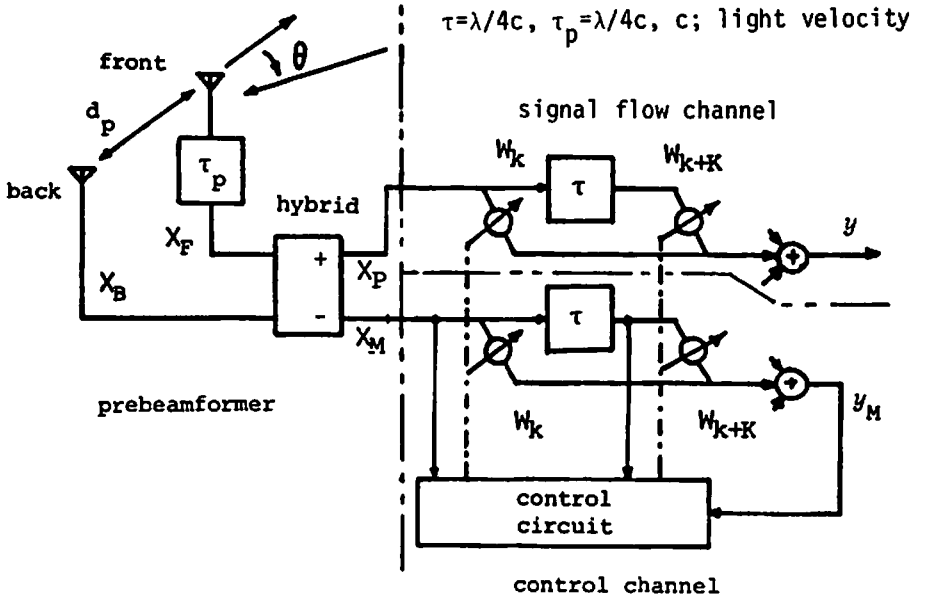

Fig.3 One channel of the adaptive array with a prebeamformer

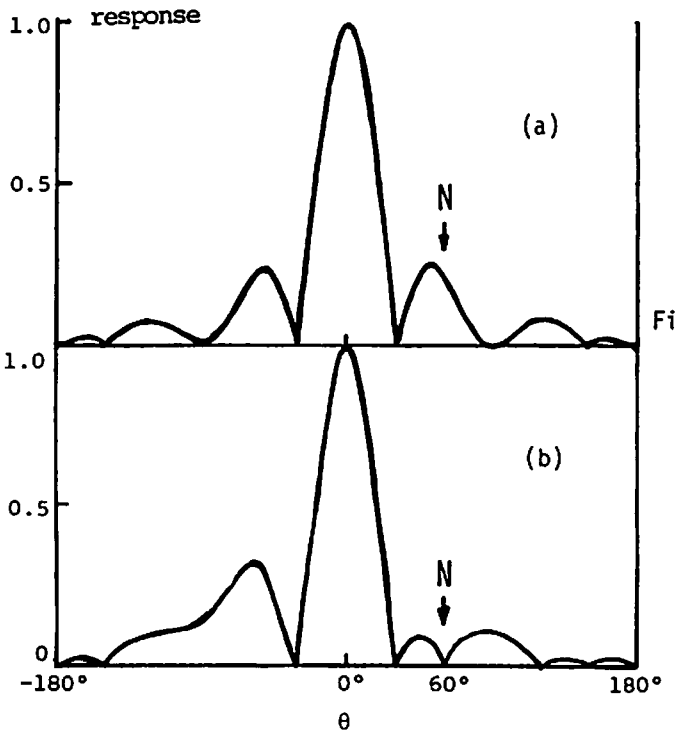

Fig.4 Simulation of DCAA
(a) initial pattern
(b) optimum pattern