12th Optoelectronics and Communications Conference/16th International Conference on Integrated Optics and Optical Fiber Communication (OECC/IOOC2007)
Technical Digest, July 2007, Pacifico Yokohama

11A1-3

Self-seeded Reflective Semiconductor Optical Amplifier for Upstream Access and Local Area Networking in Passive Optical Networks

Nishaanthan Nadarajah, Ka Lun Lee, and Ampalavanapillai Nirmalathas
National ICT Australia, Victoria Research Laboratory,
Dept. of Electrical & Electronic Engineering, The University of Melbourne, VIC 3010, Australia.
Tel: +61 3 8344 6095; Fax: +61 3 8344 6678; email: nnad@ee.unimelb.edu.au

Abstract: *A scheme for upstream access and local area networking in passive optical networks using a single self-seeded reflective semiconductor optical amplifier placed in customer premises is proposed and experimentally demonstrated.*

Introduction: Passive optical network (PON) technology is considered as an efficient solution to facilitate high bandwidth, low cost, and fault-tolerant next generation broadband access networks [1]. Apart from the upstream and downstream transmissions between the central office (CO) and the optical network units (ONUs), customers of a PON may require communication links between themselves for various services. To facilitate these services, a number of optical layer local area networking (LAN) schemes have been demonstrated [2]. Recently, there has been a lot of interest in the elimination of a laser source at the ONU, thus avoiding its stabilization and provisioning all ONUs with wavelength independence for the future access network. PONs based on a reflective semiconductor optical amplifier (RSOA) placed at the ONUs enable a simpler, more cost effective, and easily upgradeable infrastructure for access networks [3]. We recently demonstrated schemes for LAN capabilities using a single RSOA placed at each ONU [4, 5]. One scheme uses the broadband spectrum of RSOA for the LAN traffic transport and therefore suffers from dispersion while the second scheme requires unmodulated optical carriers delivered to ONUs from the CO for seeding the RSOA. In this paper, we propose and experimentally demonstrate a scheme for upstream access and LAN using a self-seeded RSOA, whereby self-seeding of RSOA is performed with the use of fiber Bragg gratings (FBGs) placed at each ONU. Compared to previous schemes, this scheme does not require high speed RF electronics, stable laser sources, and modulators at each ONU. Moreover, LAN traffic transport can be performed at any time rather than in designated time slots. We experimentally demonstrate the proposed scheme with 2.5 Gb/s downstream traffic, 1 Gb/s upstream traffic, and 1 Gb/s LAN traffic.

System Architecture: The proposed scheme for implementing upstream access and local networking using a self-seeded RSOA is shown in Fig. 1. A (N+1) x (N+1) star coupler (SC) is used to split the optical signals to each ONU, whereby the number of ONUs attached to the SC is N. As shown in Fig. 1, each ONU is connected to the SC via two distribution fibers. At the ONUs, two FBGs and an optical switch (OSW) are used to select the wavelength channels for the seeding of the RSOA. The reflective FBG slices broadband spectrum of RSOA and continuously

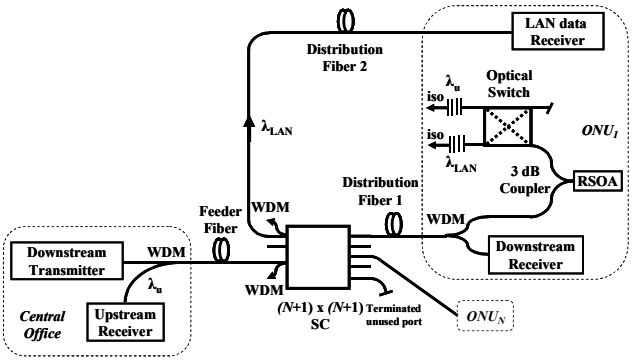

Fig. 1: PON architecture supporting LAN with self seeded RSOA placed at the ONU.

feeds the sliced channel back to the RSOA for wavelength seeding. The self-seeded wavelength channel can therefore be used for data transport. In the upstream transmission mode, the OSW is set to 'cross' state such that upstream wavelength channel λ_U is used to wavelength seed the RSOA. In the LAN mode, the OSW is set to 'bar' state such that LAN wavelength channel λ_{LAN} is used to wavelength seed the RSOA. In both operating modes, the self-seeded RSOA is directly modulated with the data and transmitted in the upstream direction. LAN data transmission to each ONU is performed using a secondary distribution fiber and is not expected to increase costs more than 0.3% [6]. A WDM coupler is used at each port of the SC facing the CO to prevent λ_U reaching the ONUs and therefore LAN is completely isolated from the PON and hence provides improved security. Upstream access follow the time division multiple access (TDMA) protocol, while LAN may follow any media access control (MAC) protocol.

Experimental demonstration: The experimental setup to demonstrate the feasibility of the proposed scheme is similar to that shown in Fig. 1. A downstream signal of 2^{31}-1 pseduo random binary sequence non-return to zero (PRBS NRZ) data at 2.5 Gb/s was modulated onto downstream wavelength channel λ_D = 1540.172 nm using a Mach-Zehnder modulator and transmitted to the ONUs through a 10 km feeder fiber, a 4 x 4 SC and a 3 km distribution fiber. At the ONUs, λ_D was separated from self-seeded channels λ_U (=1549.32 nm) and λ_{LAN} (=1554.07 nm) using a coarse wavelength division multiplexing (CWDM) coupler. A 2 x 2 OSW was used to select the seeding wavelength channels depending on the mode of operation. The RSOA used in the experiment has a small signal gain of 25 dB and a noise figure of 9 dB at a bias current of 50 mA. An optical isolator is used in front of a port of the 3 dB coupler to prevent back reflections

into the RSOA. In both transmission modes, 2^{31}-1 PRBS NRZ data at 1 Gb/s was directly modulated onto the RSOA when the RSOA was biased at 50 mA. A variable optical attenuator (VOA) is used next to the OSW to vary the seeding optical power into the RSOA. The signals on all three wavelength channels were detected using a 2.5 Gb/s p-i-n receiver. An optical filter with a bandwidth of 1 nm was used before the LAN and upstream data receiver to prevent the out-of-band ASE noise from the RSOA entering the receiver. However, the use of this optical filter can be avoided by employing a narrowband CWDM filter at the SC. A series of experiments were conducted and bit error rates (BERs) for all signals were measured.

Results and Discussions: Fig. 2 shows the observed optical spectra at the upstream and LAN data receivers. The optical power difference of 6 dB at both receivers was due to the lower transmitted power and feeder fiber loss for the upstream wavelength channel. Note that an optical signal to noise ratio (OSNR) of more than 36 dB was observed for both channels. Fig. 3 shows the measured BER curves for the signals. The transmission penalty for 2.5 Gb/s downstream data compared to the back-to-back (B-B) measurements was less than 0.1 dB. The penalty for the 1 Gb/s upstream data and LAN data transmissions compared to B-B measurements was less than 0.4 dB. To measure the effects of the seeding optical power into the

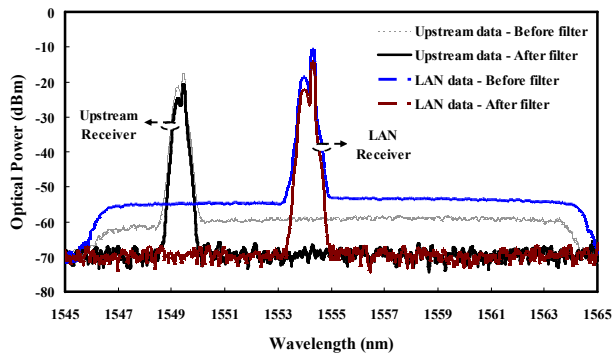

Fig. 2: Observed optical spectra at upstream and LAN data receivers.

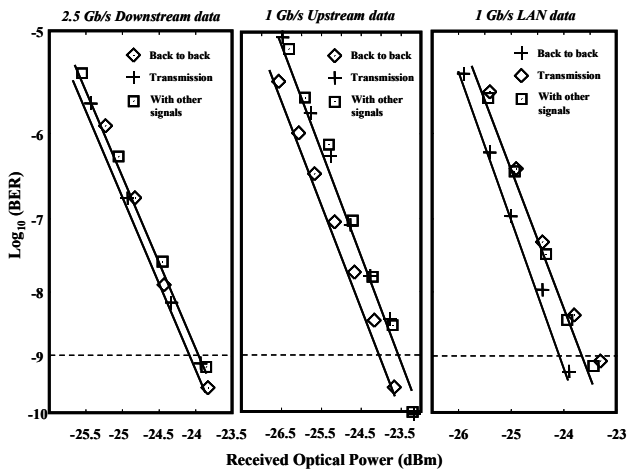

Fig. 3: Measured BER curves for all signals.

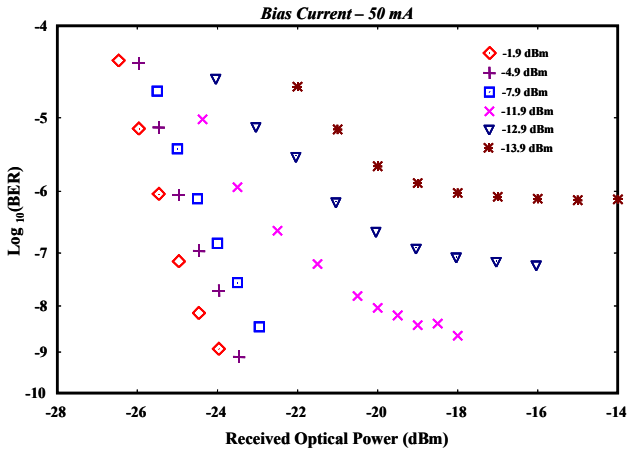

Fig. 4: Measured BER curves for LAN data with varying seeding power for a bias current of 50 mA.

RSOA on the performance of the transmitted signals, the optical power through the VOA was varied and the BER measurements for the 1 Gb/s LAN data were measured. For these measurements, the bias current of the RSOA was kept at 50 mA. As can be seen in Fig. 4, for higher seeding powers above -7.9 dBm, error-free transmission can be obtained. However, as the seeding power is reduced below -11.9 dBm, error floors were observed and error-free data could not be recovered. For higher optical seeding power, larger OSNR for the seeded wavelength channel can be obtained. Moveover, the stronger the seeding power, the RSOA will be driven to operate at a deeper saturation regime and the RSOA will exhibit as a high pass filter (HPF). This phenomenon advantageously helps suppressing the crosstalk orginated from the seeding signal. Hence, an improvement in the BER performance is expected, while the seeding power is increased. In a separate experiment, the bias current of the RSOA was intentionally reduced to 40mA, worse BER performance was obtained, which is due to the reduction in HPF effect resulted from low signal gain in the RSOA. As the upstream transmission from the ONUs to the CO is based on TDMA protocol and therefore burstmode operation of the upstream transmitters at each ONU is required. It was found that RSOA turn-on and turn-off times are lower than 40 ns, which is much lower than the required laser turn-on time of 512 ns specified in the IEEE standard.

Conclusions: We have proposed and experimentally demonstrated a scheme for upstream access and LAN capability in PONs using a self-seeded RSOA at the ONU. The wavelength seeding of the RSOA can be performed using FBGs. The experimental results show that all signals can be recovered with minimal penalty.

References:

1. R. Cohen, *Commun. Mag.*, pp. 156 - 163, Feb. 2003.
2. A. Tran, et. al., *IEEE PTL.*, pp. 670 - 672, Mar. 2006.
3. J. Prat, et. al., *IEEE PTL.*, pp. 250 - 252, Jan. 2005.
4. N. Nadarajah, et. al., *COIN'06*, pp. 190 – 192, 2006.
5. N. Nadarajah, et. al., *LEOS'06*, pp. 701 – 702, 2006.
6. H. Mickelsson, et. al., *http://www.ieee802.org/3/efm*.