4K IP Production and Virtual Production

SUZUKI Takashi ITO Takahito

Abstract

NHK has taken various technological initiatives for the Olympic and Paralympic Games Tokyo 2020. This article introduces our 4K IP production for the Olympic Games connecting the NHK Broadcasting Center in Shibuya, competition venues and production sites via IP and the state-of-the-art virtual CG contents conducted in the NHK dedicated studio temporarily set up at the Olympic Stadium.

Keywords : NHK, 4K, IP production, Virtual CG

1. 4K IP Production

1.1 System Overview

For the Tokyo 2020 Games, NHK conducted 4K IP production using IP (Internet Protocol) (the same system was operated in 2K for the Tokyo 2020 Paralympics). The remote production for 4K IP was conducted by connecting the CT450 studio in the NHK Broadcasting Center, which was the core of the system, and remote locations such as NHK dedicated studio at the Olympic Stadium, 10 competition venues and production sites in the Nippon Seinenkan via IP network (Figure 1). Sony was selected for the system integration as a result of a procurement process. NMI (Networked Media Interface), which is a proven IP live transmission technology with low latency, and all other system including video, audio, control signal and communication system were designed to be IP-compatible.

1.1.1 NHK Broadcasting Center CT450 Studio

The CT450 studio was equipped with IP equipment, such as network switches that serve as the core of the entire system, as well as main program production equipment, such as switchers, mixers, production servers, and virtual machines. All signals were converted to IP and connected to each site. Program feeds were converted from IP to SDI (Serial Digital Interface) signals, then connected to the system in the NHK Broadcasting Center, and finally delivered to all over Japan. At the CT450 studio, adjustment of the signals and cameras at the competition venues and monitoring the IP circuits were done.

1.1.2 NHK Dedicated Studio at Olympic Stadium

A 150 m^2 studio (Figure 2) was temporarily set up on the southeast side of the Olympic Stadium for the exclusive use of NHK. The studio floor was equipped with cameras, microphones, lighting equipment, a camera tracking system and green background necessary for virtual operation. All video and audio signals, camera tracking data, camera and lighting control signals, and communication devices were converted to IP for transmission. The program production functions of the studio, such as camera switching and control, audio mixing, lighting control, and virtual operations at the Olympic Stadium, were performed remotely at the production site, which is described later. This enabled the studio operation with fewer technical personnel on-site.

1.1.3 Competition Venue

In addition to the dedicated studio, NHK deployed IP

SUZUKI Takashi
Broadcast Engineering Department, Japan Broadcasting Corporation
ITO Takahito
Broadcast Engineering Department, Japan Broadcasting Corporation
The Journal of The Institute of Electronics, Information and Communication Engineers, Vol.105, No.8, Supplement, pp.76-81, August 2022

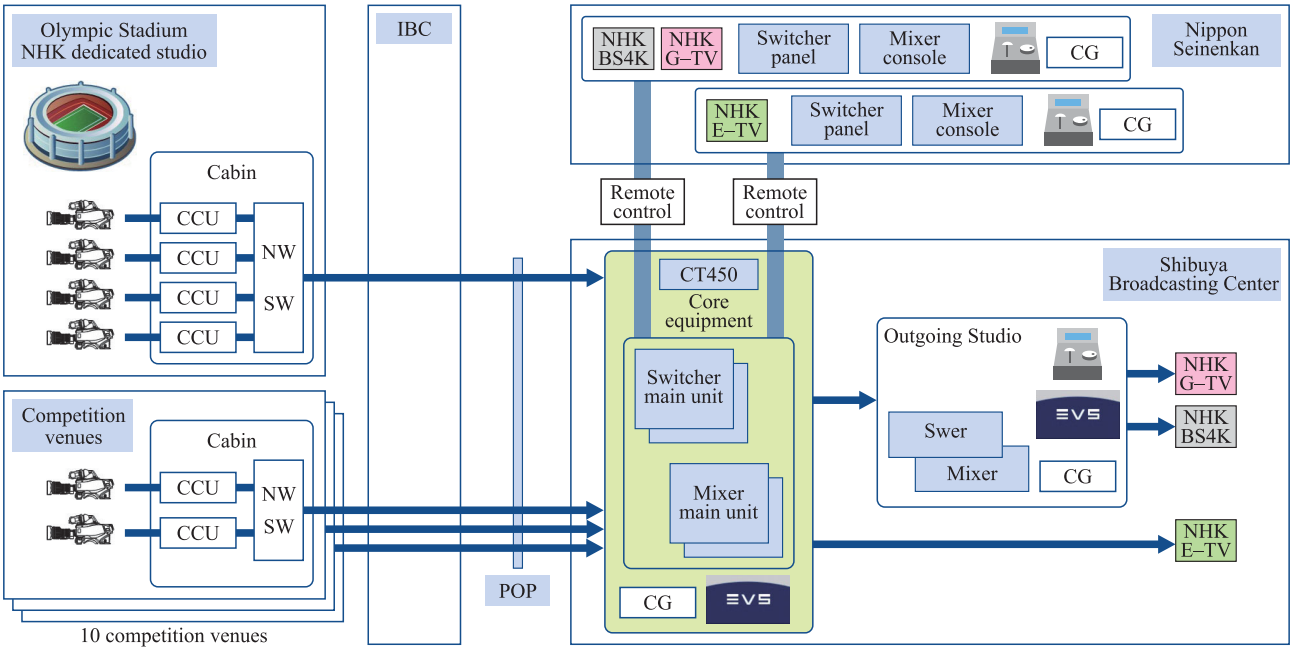

Figure 1 Overview of 4K IP Production (©2021 NHK)

Figure 2 NHK Dedicated Studio at the Olympic Stadium (©2021-International Olympic Committee-All Rights Reserved)

Figure 3 IP Facilities Installed at the Competition Venue (©2021 NHK)

Terminology

Chroma Key System A system that generates key signals based on color components using a keyer and combines the extracted video with another video.

Keyer Software or hardware containing algorithms for generating key signals.

Keying Generating key signals from color and light/dark components and extracting a portion of the video.

nit Unit of brightness per unit area, equivalent to cd/m^2.

facilities for remote production at 10 competition venues (Figure 3). These venues have designated areas called "announce positions" where reporters make presentations and "mixed zones" where athletes are interviewed directly. Cameras and microphones were installed in these areas, and these signals from venues were connected to the CT450 studio via IP for remote production at the production site. Camera adjustments were made at the CT450 studio, as described above.

1.1.4 Production Site

Two sub-control rooms were temporarily set up in the

Figure 4 Sub-control Room at the Nippon Seinenkan (©2021 NHK)

Nippon Seinenkan near the Olympic Stadium as a production site : one was for integrated production of television channels, General TV and BS4K (Figure 4), and the other was for Educational TV. At the sub-control rooms, operators remotely controlled the program production equipment installed in the CT450 studio to switch video signals and mix audio. The production site had access to all the resources in the NHK dedicated studio and competition venues necessary for 4K IP production, and also performed lighting and camera adjustments, and virtual operations for the dedicated studio, as mentioned above. In the sub-control room of the General TV and BS4K, operators inserted the feeds from the dedicated studio and the announce position at the venues into the international live feeds, and enabled the guests and commentators on-site to interact each other.

1.2 Clock Supply by PTP

Conventional broadcasting systems use the Black Burst Signal (BB Signal) as a synchronization signal. The Precision Time Protocol (PTP) specified in SMPTE ST 2059 is a method to achieve the same synchronization in IP. GPS antennas were installed in the dedicated studio, competition venues, and the production site, and PTP was generated from the PTP-Grand Master using the GPS signal as the synchronization source. For the equipment that requires BB, PTP-derived BB were generated from the PTP-Grand Master so that the PTP and BB of the entire system to be synchronized. In the CT450 studio, PTP was generated from the PTP-Grand Master based on the GPS-RF signal from the NHK Broadcasting Center. In order to avoid the effects of jitter on the circuits, PTP was operated in a closed state at each site, not transmitted between each other. All the network switches were compatible with boundary clocks.

1.3 Transmission Circuits

In order to transmit 4K ultra-high-definition video, the circuits capable of large capacity and high speed transmission are required. It is challenging to use the conventional live broadcast system in SDI when transmitting extremely high data rate 4K signals over a long distance. However, by using IP technology, it enables to handle multiple signals within the bandwidth. It is fully compatible with 4K production. This time, the bandwidth was secured as follows : from the International Broadcasting Centre (IBC) to the NHK Broadcasting Center was 170 Gbit/s, and from the NHK Broadcasting Center to the production sites was 160 Gbit/s.

Since each competition venue, including the Olympic Stadium, was under the control of OBS (Olympic Broadcasting Services), all signals were centralized at the IBC located at Tokyo Big Sight which serves as the OBS primary base of the broadcast operation. The circuits from the IBC to the outside world was connected to a POP (Point of Presence) designated by OBS, and signals were exchanged at the POP between OBS and KDDI, a telecom provider selected by NHK, and finally connected to the NHK Broadcasting Center. The circuits between the NHK Broadcasting Center and the production site were also established by KDDI.

1.4 Monitoring System

LEO (Live Element Orchestrator) is a system optimized based on Skyline Communications' DataMiner by Sony in order to manage IP Live production system efficiently. This is a centralized monitoring system which enables to centralize configuration and monitoring of all hardware and production resources provided by Sony and other vendors (Figure 5). It is essential to have a monitoring and controlling system with excellent visibility and operability for 4K IP production which requires high-capacity and high-speed transmission in real time. By introducing LEO in the system, NHK has succeeded in operating the largest system ever in stable.

1.5 From SDI to IP

NHK was able to realize complex production requirements and succeed in large-scale 4K IP production. Through a number of Proof of Concept (PoC) and small-

Figure 5 LEO Monitoring Screen (©2021 NHK)

scale live broadcast trials, we have steadily built up a track record and knowledge of IP, and we believe that we have demonstrated the power and potential of IP production. We also introduced the concept of resource sharing, such as the ability to share resources with each other in the two sub-control rooms at the production site. For the Paralympics, where international signals were provided in 2K, the system was changed from 4K to 2K during the two-week transition period and operated through the Games. The advantage of using IP was that physical changes were kept to a minimum such as replacing the infrastructure and connecting cables.

Eight years after the decision in Buenos Aires, in September 2013, to host the Tokyo Games, the broadcasting world has undoubtedly evolved from SDI to IP.

2. Virtual Computer Graphics Content

2.1 Design Concept

The design concept is "a visual world where live-action and computer graphics (CG) are seamlessly integrated". The NHK dedicated studio at the Olympic Stadium was designed to create a space where the performers can move seamlessly between virtual and physical world without being aware of the boundary between these two worlds. The physical world was designed to take advantage of a 5-meter-high window with a view of the Olympic Stadium. The left wall facing the window was set up with a green background to allow CG to be rendered behind and in front of the performers. In addition, the studio was designed efficiently to avoid floor monitors and cameras being appeared on screen so that it would not distract the concentration of viewers (Figure 6 and Figure 7).

Figure 6 Image of a Virtual Set (©2021-International Olympic Committee-All Rights Reserved)

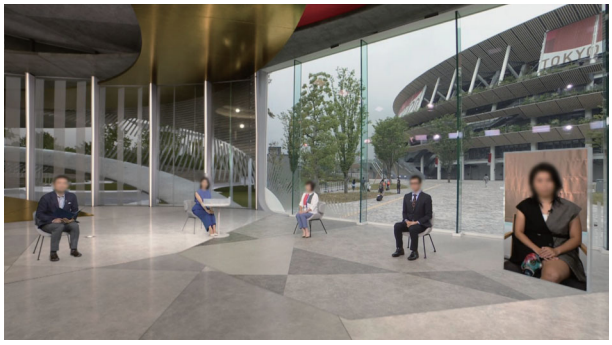

Figure 7 Virtual Set On-air Screen (©2021-International Olympic Committee-All Rights Reserved)

2.2 System Overview

By introducing Zero Density's Reality that support 4K

HDR (High Dynamic Range), which was the first in Japan for TV broadcasting, we have realized photo-realistic CG content that fully performs the rendering power of the game engine, Unreal Engine 4.

Reality enables everything from CG rendering to chroma key processing on a single machine. It is characterized by a high-performance chroma key system (Terminology) called Cyclorama. Its unique keyer (Terminology) significantly expands the range of video expression. In addition to the conventional method of keying (Terminology) by specifying colors, Reality Keyer employs an algorithm that extracts and keys the difference between the color components of each pixel against the original green background. Furthermore, Reality accurately reproduces the green background in three-dimensional space, tracks it, and performs keying only within that range. Moreover, by placing and projecting live-action images in 3D space, the shadows and reflections of the live-action images were accurately reflected on the CG object, resulting in a realistic composite image.

The virtual system also supports remote production that connects the CT450 studio, the NHK dedicated studio, and the production site via IP. Four cameras were set up for virtual production in the NHK dedicated studio. Mo-Sys's Star Tracker was used for the camera tracking sensors. Then the camera tracking data was sent to a rendering PC in the CT450 studio. All the operations were conducted in the broadcasting site, and two types of network were used : one was the network for remote control for PC and the other was virtual network that all the PCs and the servers related to Reality Engine were connected. The CT450 studio was equipped with all PCs, as well as PCs and servers for material exchange and data servers for development and transmission (Figure 8).

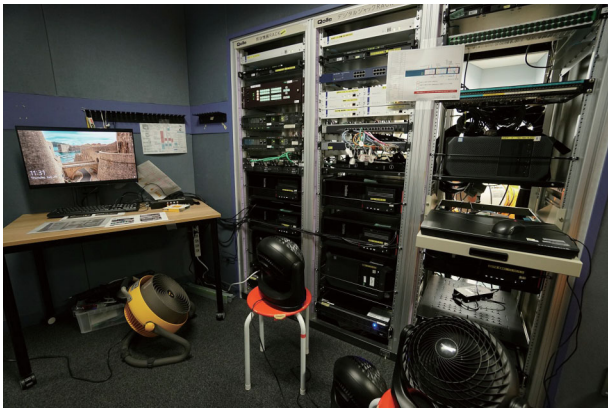

Figure 8 Imaging Main Unit Installed in CT450 Studio (©2021 NHK)

2.3 4K HDR Support

The Olympic Games coverage was produced in 4K HDR format. The virtual system had two inputs : one video wall input (4 split screens, each resource in 2K) and one camera image. As for the output, one main line plus PC screen to check chroma key were sent to the Nippon Seinenkan. The load to simultaneously handle three 4K HDR input/output systems was higher than expected. The machine specs planned in 2020 could not handle the rendering load, so the specs were significantly upgraded in 2021.

For the Olympics, 2K programs were produced simultaneously while handling 4K HDR. 4K HDR were converted to 2K SDR (Standard Dynamic Range) using the batch conversion LUT (Look Up Table) provided by OBS. For the Paralympics, only 2K SDR production was conducted. We created a system and established rules to facilitate content production for these two environments.

The SDR environment (sRGB) was chosen as the working environment because it facilitates ① collaboration with external artists and ② the use of existing know-how. After the artists adjusted the look on the SDR production environment, the final look was checked and adjusted on the master monitor environment prepared by the team.

The basic policy of the 4K HDR/2K SDR conversion is as follows. The white reference level is 100 nits (Terminology) (100%) for SDR, compared to the peak luminance of 100 nits (term) for SDR and approximately 200 nits (20%) for HDR compared to the peak luminance of 1,000 nits for HDR. It is necessary to multiply the output of Reality Engine by 0.2 to make the same white color in an HDR environment as in an SDR environment. This adjustment was performed in the Post Process section, the final processing stage of Reality Engine, which is a two-dimensional video processing section after CG rendering and can perform the equivalent of grading (Figure 9).

The color gamut of the video output was specified in the Reality Engine environment settings. The color gamut was set to Rec. 2020 for the Olympics and Rec. 709 for the Paralympics at the output stage of CG created under sRGB environment to output the most appropriate color gamut for each program need.

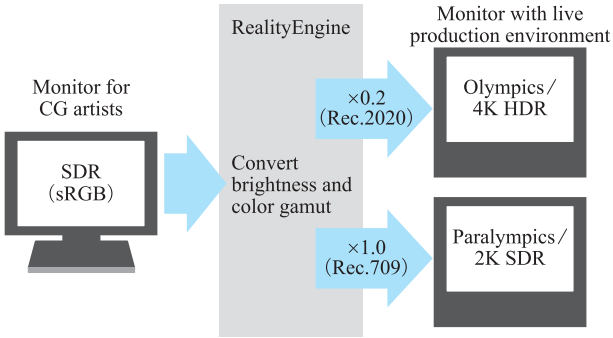

Figure 9 Monitor Environment Compatible with HDR/SDR (©2021 NHK)

2.4 From AR to MR

This was the first long-term operation of Reality at NHK. Although the technical hurdles were not low as remote production and 4K HDR production were required, we were able to broadcast without any machine or software problems.

We believe that our initial goal, "a visual world where live-action and CG are seamlessly integrated" has been achieved through this operation. Many people expressed on Twitter and other media that they cannot tell the difference between CG and live shots. It was also well received that the studio that has 12 m on each side actually presented as a much more dynamic space. The conventional Augmented Reality (AR) framework of "adding information to the physical world" has advanced to Mixed Reality (MR), a world in which "CG and live-action are equally fused". In addition to this pursuit of visual expression, the enhanced sports commentary function, which is indispensable for production, has significantly contributed to the program's excitement. We believe that our accumulated knowledge of virtual sports and studios has been fully utilized.

3. Conclusion

The 4K IP production and the virtual system perfectly delivered the passion of the Olympic and Paralympic Games to viewers without significant problems during the approximately two months of operation. We want to express our gratitude to everyone involved in broadcasting the Olympic and Paralympic Games Tokyo 2020.

(Received February 28, 2022 ; Revised April 1, 2022)

SUZUKI Takashi

He graduated from Yokohama National University in 1995. He joined NHK in the same year and has been in charge of Tokyo 2020 operations in the Tokyo Olympics and the Paralympics Technical Promotion Division of the Broadcasting Engineering Bureau since 2017. Currently in the General Affairs Department, Broadcasting Engineering Bureau.

ITO Takahito

He graduated from the Graduate School of Information Science and Technology, the University of Tokyo, in 2007. From 2016 to 2017, he researched VR as a visiting researcher at MIT Media Lab. He was in charge of developing the AR system and contents for the Tokyo 2020 Games at the National Stadium Studio. Currently in the Production Promotion Department, Production Technology Center, Broadcasting Technology Bureau.