Switching Power Supplies and Power Electronics

Masahito Shoyama
Faculty of Information Science and Electrical Engineering,
Kyushu University

1. Introduction

It is a great honor for me to have been awarded the IEICE fellow for my contribution on "Research and Education on Switching Power Supplies for Electronics, Information Communication." In this article, I will introduce my research field with comparing the features of technologies in the switching power supplies and that in the power electronics.

For many years, I have been submitting our papers and presenting our research results with focusing on the switching power supplies at the technical conferences organized by the technical committee of Energy Engineering in Electronics and Communications (EE) in the Communications Society (CS) of the Institute of Electronics, Information and Communication Engineers (IEICE). The technical committee of EE is the successor to the former technical committee of Power Supply Engineering for Electronics and Communications (PE). Major topic areas of the technical committee of EE are power devices, power conversion equipment, power system, energy system and batteries. Through these technical conferences, I have deepened my technology.

A typical example of a switching power supply for communication is a so-called "DC-DC Converter" that uses a DC battery installed in a communication station as a source of power and stably supplies power to a DC communication device as a load. When we talk about "Switching Power Supplies," we often refer to this "DC-DC Converters." The switching power supplies were originally developed by NASA in the US as satellite power supplies that require small size, light weight and high efficiency characteristics. Today they have been adopted as power supplies for almost all electronic devices. Technological development for further compactness, light weight, and high efficiency is continuing.

While my research is originally based on switching power supplies, that is, DC-DC converters, I have expanded the scope of my research to other power electronics circuits, for example inverters for motor drive and inverters for AC grid interconnection. In addition, I have expanded the venue for presenting our research results at conferences and journals not only to the IEICE, but also to the Institute of Electrical Engineers of Japan (IEEJ) and the Institute of Electrical and Electronics Engineers (IEEE) where the technical contents of power electronics are dealt with in general.

In the following, by comparing the features of technologies in the switching power supplies and that in the power electronics, I will try to send a message that will be helpful for researchers who are active in both research fields, especially young researchers who will lead the next generation.

2. Switching power supplies and power electronics

The general recognition of the definition of "power electronics" is due to W. E. Newel, a researcher at Westinghouse, as shown in Fig. 1 [1]. He recognized the power electronics as a comprehensive technology which consists of the three of main technical fields of "Power" (static and rotating equipment), "Electronics" (devices and circuits) and "Control" (continuous and sampled-data system). In addition, reference [1] also shows detailed technical issues at that time in each field.

In recent years, in addition to the above technical fields, the power electronics is often regarded as a comprehensive technology that includes layout/cooling technology, passive component technology, reliability, design methods, communication technology, etc. And so, the fields of application are widespread to renewable energy utilization, xEV (electrified vehicle), railroad technology (train), wireless power transmission, LED lighting, etc.

By the way, I think that many people consider "switching power supplies" as one of application fields of "power electronics." However, I would like to note here that those who started with research on switching power supplies, such as myself, may have different perspectives.

One of those perspectives is that the switching power supply started from the electronic circuit as a nonlinear magnetic application represented by the Royer oscillator. This can be said from the fact that late T. G. Wilson Sr., a pioneer of switching power supply research and his disciple F. C. Lee, both in the US, and Koosuke Harada in Japan have all started switching power supply research as an electronic circuit.

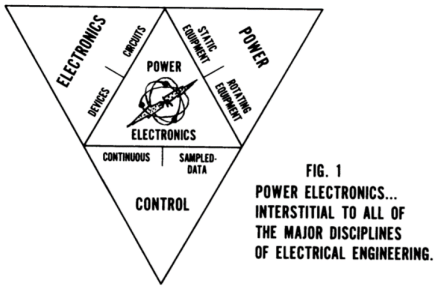

Fig. 1 Definition of "Power Electronics" by W. E. Newel [1].

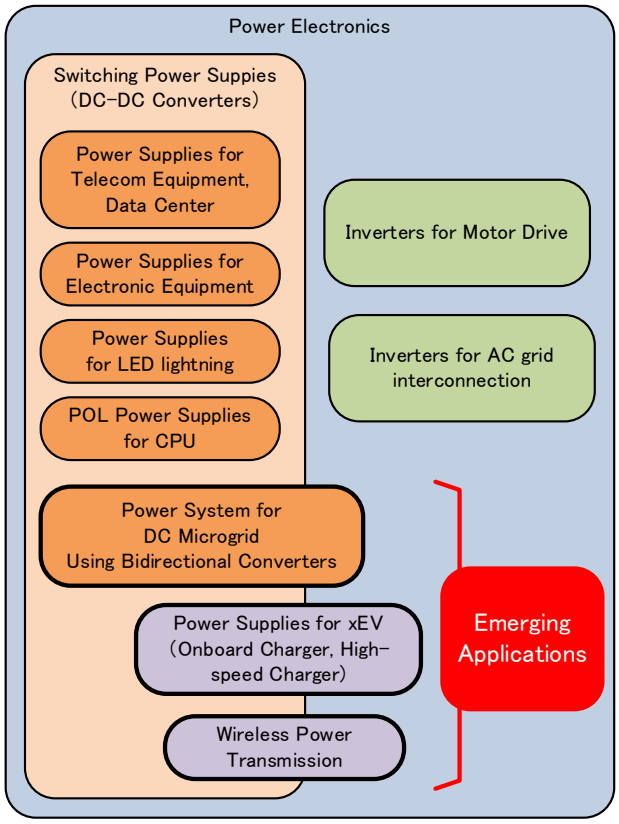

Fig. 2 Application fields of power electronics and switching power supplies.

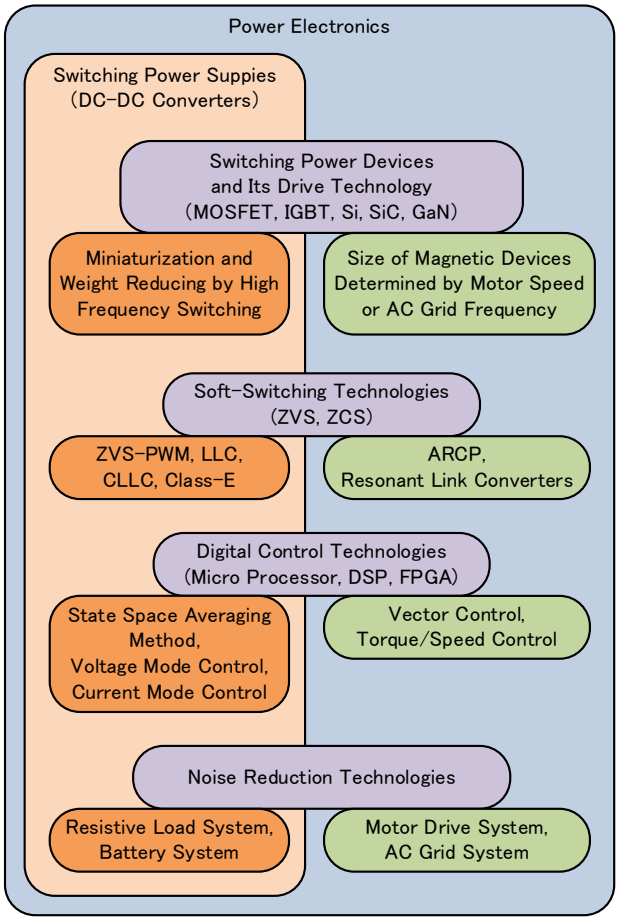

Fig. 3 Important technologies of interest in power electronics and switching power supplies.

Another view is that it emphasizes the function as a "power supply", that is, a "circuit that supplies power to the load", and I think this understanding can easily be accepted by everyone.

However, there are many things in common with both basic technologies, such as "controlling power with high efficiency using switching technology by semiconductor switches." Therefore, there are many common technical issues caused by switching, and many researchers are active across both research fields.

Figure 2 shows the relationship between the application fields of power electronics and switching power supplies. The application fields of power electronics includes both application fields of switching power supplies and those of inverters that handle AC power. Among them, some emerging applications, for example, DC microgrid, power supplies for xEV and wireless power transmission will become very important in promoting renewable energy use, reducing CO_2 emissions and making our lives convenient.

Figure 3 shows the important technologies of interest in power electronics and switching power supplies [2], [3]. As shown in this figure, many of the basic and important technologies are common to both, but it should be noted that the specific applied technologies are different. Particular attention should be paid to inverter applications that handle AC.

3. Conclusions

I have introduced my research field. Many people consider switching power supplies as one of application fields of power electronics. However, it should be noted that research on the switching power supplies started from the electronic circuit as a nonlinear magnetic application.

The application fields of power electronics and those of switching power supplies were classified, and the important technologies of interest were also shown both in power electronics and in switching power supplies. By comparing them, we can get a deeper understanding of both research fields and often find solutions to problems.

I hope that this article will be helpful for researchers who are active in both research fields, especially young researchers who will lead the next generation.

4. References

[1] W. E. Newell, "Power Electronics -merging from Limbo," IEEE Power Electronics Specialists Conference, pp.6-12, June 1973.

[2] T. Ninomiya, M. Shoyama, "Power Electronics Handbook (2.7 Resonant Converters)," R&D Planning, pp.357-380, Feb. 2002. (in Japanese)

[3] M. Koyama, "Comparison in Control technologies used in Inverters for Motor Control and Switching Power Supplies," The 28th Switching Power Supply Symposium, D4-1, July 2013. (in Japanese)

