2017 International Symposium on Nonlinear Theory and Its Applications,
NOLTA2017, Cancun, Mexico, December 4-7, 2017

# Nonlinearity in RF Front-End as a Bottleneck in High Speed Mobile Communications

Ken-ya Hashimoto†, Tatsuya Omori†, Kazuki Maruta†, and Chang-Jun Ahn†

†Graduate School of Engineering, Chiba University
1–33 Yayoi-cho, Inage-ku, Chiba-shi 263-8522 Japan
Email: {k.hashimoto, omori, junny}@faculty.chiba-u.jp, maruta@chiba-u.p

**Abstract–** This paper reviews impact of nonlinear signal generation in the RF frontend to high speed mobile communications such as LTE-advanced with up and down link carrier aggregation. First, nonlinearity in RF analog circuits is surveyed, and discussions are given on impact of the nonlinearity to high speed communications. Discussions are also extended to its digital cancellation.

## 1. Introduction

Evolution of integrated circuit (IC) technologies enables to process vast data in digital domain with surprisingly high speed and extremely low power. IC industries have paid a lot of efforts to replace analog functions to degital ones and integrate all necessary funtions on a single Si chip as much as possible [1]. But it is not easy for the radio frequency (RF) frontend, especially RF filtering for removal of unwanted signals.

It is possible to realize RF filters using standard CMOS technologies [2]. Of course, they can be integrated in a CMOS IC, and can be tuned digitally. Although everything looks perfect, their nonlinearity is much worse than requirements.

A few attempts were reported to integrate passive RF filters on a Si Chip [3,4]. Although excellent performances were reported, they have never been brought up to mass production because significant reduction in production yield is expected for the use in multi-band and multi-standard phones where a lot of RF filters with various specifications must be installed.

This paper discusses impact of nonlinear signal generation in the RF frontend to high speed mobile communications. First, nonlinearity in RF analog circuits is surveyed, and its impact to high speed communications is discussed. Discussions are also given on its digital cancellation.

## 2. Impact of nonlinearity in RF frontend

Fig. 1 shows a configuration of transceivers in the frequency domain duplex (FDD) mode [5]. Analog signals received by an antenna (ANT) are amplified by a low noise amplifier (LNA), down-converted by a mixer 1, and converted to receive (Rx) signals in digital domain by an analog-to-digital converter (ADC). In the Rx path, a low pass filter (LPF) is given for the channel selection, and variable gain amplifier (VGA) is given for adjusting the signal level.

On the other hand, baseband digital data are converted to transmit (Tx) signals by a digital-to-analog converter (DAC), and they are up-converted by a mixer 2, amplified by a power amplifier (PA), and emitted from the ANT. In the Tx path, a band pass filter (BPF) is given to avoid incidence of unnecessary signals to the PA.

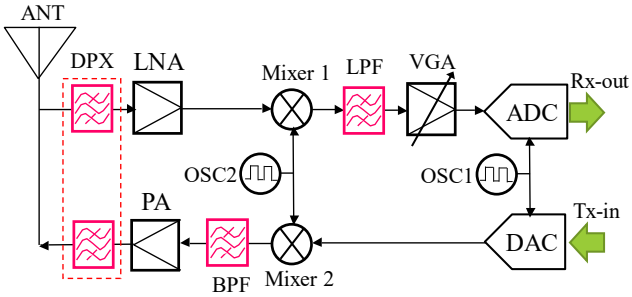


Fig. 1 Simplified transceiver architecture

A pair of BPFs is placed next to the ANT. This device called the duplexer (DPX) separates incoming and outgoing signals in the frequency domain. Another important function is selection of signals in the target frequency band and rejection of all unnecessary signals. DPXs are realized by the surface and bulk acoustic wave (SAW/BAW) technologies [6,7].

If the Rx filtering is not sufficient, the signal to noise ratio (SNR) for target signals will be deteriorated by saturation and/or nonlinear signal generation in succeeding Rx circuits. On the other hand, insufficient Tx filtering results in emission of out-of-band signals, which may obstruct other communications.

The input referred thermal noise level in the detected signal is given by [5,8]

$$P_N = -174 + 10\log B + NF \text{ [dBm]} \quad (1)$$

at 300 K, where $B$ is the signal bandwidth in Hz and $NF$ is the noise figure of the receiver in dB. Requested receiving sensitivity of circa -100 dBm must be hold under exposure to incoming jammer signals upto -15 dBm of any frequency at the ANT [2]. For the purpose, any sort of unnecessary signals must be suppressed below the thermal noise level.

Hereafter we will discuss influence of the nonlinearity. Let us consider the case where a sinusoidal signal with the

frequencies $f_a$ and power $P_a$ is applied to a receiver circuit. Nonlinearity of the circuit will cause

(a) 2nd-order harmonic (H2) with $f=2f_a$ and $P \propto P_a^2$
(b) 3rd-order harmonic (H3) with $f=3f_a$ and $P \propto P_a^3$

When another signal with the frequency $f_b$ and power $P_b$ is also applied simultaneously, following nonlinear products also appear:

(c) 2nd-order intermodulation distortion (IMD2) with $f=|f_a \pm f_b|$ and $P=P_aP_b/\mathrm{IP2}$
(d) 3rd-order intermodulation distortion (IMD3) with $f=|2f_a \pm f_b|$ and $P=P_a^2P_b/\mathrm{IP3}^2$ or $|2f_b \pm f_a|$ and $P=P_aP_b^2/\mathrm{IP3}^2$

where IP2 and IP3 are 2nd and 3rd order intercept points, respectively, which indicate how high the saturation level is [5].

One of the most important mechanisms is IMD3 between in-band signals. This is because IMD3 products $2f_a$-$f_b$ and $2f_b$-$f_a$ can be in-band when $f_a$ and $f_b$ are in-band. This is an issue of the RF circuit design because the RF filtering does not give any impact.

In FDD mode receivers, IMD2 and IMD3 caused by Tx and incoming jammer signals and self-mixing of Tx signals are also important. This is because DPX is not perfect, and leakage of these signals to the Rx side is not negligible.

Until several years ago, another BPF using the SAW technology was inserted between LNA and mixer 1, and these unnecessary signals were suppressed sufficiently. RF IC designers paid much efforts to improve circuit linearity, and enabled to remove this discrete component. This "SAW-less" architecture allows to integrate most of all necessary transceiver circuits on a single Si IC [9].

It is clear that DPX performance is critical in this architecture since all necessary RF filtering is carried out by DPX. Its key performances are

(1) Suppression level of Tx signal leakage to the Rx port called isolation
(2) Suppression level of out-of-band signals from ANT to Rx ports
(3) Attenuation levels from Tx to ANT and Rx to ANT ports called insertion losses. Excess loss from Tx to ANT results in excess consumption of buttery power, and that from Rx to ANT does in *NF* deterioration of the same amount.
(4) Linearity of DPX itself [10,11]. Although nonlinearity of DPX is very small, IMD2 and IMD3 caused by Tx and incoming jammer signals are not negligible because of their signal levels. One of the effective countermeasure is to add notch filter functions for harmful jammer frequencies.

DPX is also requested to be as small as possible, durable for high Tx power (~ +25 dBm), and low price.

As one of recent trends, frequency difference between Tx and Rx bands is going to be narrower. For example, Band 25 has the same frequency allocation as Band 2 but their bandwidths are larger by 5 MHz. This is realized by reducing separation between these bands by 5 MHz. Then tight stability against temperature variation and sharpness of passband edges are also requested in recent DPXs. Furthermore, wider operation temperature range is requested because DPXs are often placed close to PAs, whose heat exhaust is significant.

Higher peak-to-average power ratio (PAPR) in recent communication standards is also troublesome because peak power instead of average one determines nonlinearity of DPXs.

It is also true for PAs. The maximum output swing is determined by bias current supplied to the final-stage transistor. Higher bias current improves linearity but power efficiency becomes worse. Various amplifier configurations are developed to achieve linearity and power efficiency simultaneously [12].

One of the biggest concerns right now is the carrier aggregation (CA) [13], especially the inter-band CA. Until its introduction, signals in different Bands could be separated by RF switches (SW) as shown in Fig. 2 left. On the other hand, to receive signals with different Bands, multiplexers (MPXs) such as quadplexers [14] are necessary to separate multiple Tx and Rx signals in the inter-band CA. MPXs need to satisfy all requirements which preexisting DPXs have already fulfilled. In addition, good isolation is requested between aggregated Bands. This rejection ratio is called the cross-isolation.

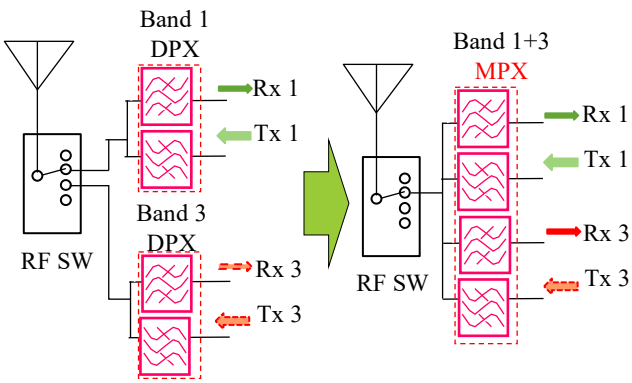


Fig. 2 Evolution of DPX to MPX for CA

Downlink (DL) CA has already been started. As a next step, uplink (UL) CA is scheduled to be introduced. It makes the situation more severe. Namely, two strong Tx signals will be incident to MPXs simultaneously, nonlinear signals will become more prominent and appear in various frequencies.

## 3. Remedies for nonlinearity problems

Although performances of DPXs and MPXs still keep on improving steadily, specifications also become tougher and tougher. The toughest one is linearity.

Let us consider the CA_1A_3A_8A. Its frequency allocation is as follows:

Band 1 UL 1920-1980 MHz DL 2110-2170 MHz
Band 3 UL 1710-1755 MHz DL 1805-1880 MHz
Band 8 UL 880-915 MHz DL 925-960 MHz

When UL CA is considered, IMD3 between Band 1 and Band 3 Tx signals falls into Band 1 Rx band, and H2 of Band 8 Tx signals falls into Band 3 Rx band. Although these unwanted signals generated in PAs may be suppressed to an acceptable level by the filtering function of MPXs, those generated in MPXs will be superimposed to target signals, and are not avoided by analog signal processing alone.

Since Tx signals are known, these nonlinear products may be able to reproduced numerically and eliminated from detected signals provided that nonlinear generation can be modeled in high accuracy. In RF active devices, the memory effect (hysteresis) is not negligible, and makes the nonlinearity modeling and cancellation complicated. [12,15] On the other hand, the effect is not observed in commercial RF SAW/BAW devices.

One simple question readers may have. How well can we model the nonlinear behavior? Fig. 3 compares between measured and simulated 3H responses when an RF signal of +15 dBm is incident to a SAW resonator [16]. Relatively good coincidence can be seen between two results although there still exist unknown nonlinear mechanisms which have not been taken into account in the simulation model.

We may model nonlinear behavior MPXs by extending this simulation model. Assuming the other transceiver elements are linear, we will be able to generate replica of nonlinear signals generated by mixture of Tx signals.

Note that since DPXs and MPXs are purely passive and low loss, variation of the antenna impedance influences the filter responses including nonlinear behavior. Temperature variation may also give impacts to these properties.

Mixture of Tx signals with incoming jammer signals also becomes more troublesome because the number of harmful frequencies increases. Its digital compensation might be difficult because incoming signals are unknown.

## 4. Summary

The paper discussed impact of nonlinear signal generation in the RF frontend to high speed mobile communications.

It was shown that specifications related to the nonlinearity become harder and harder, and further drastic improvement is demanded for introduction of the UL interband CA.

Discussions were also given on its digital cancellation, especially for mixing of Tx signals in DPXs.

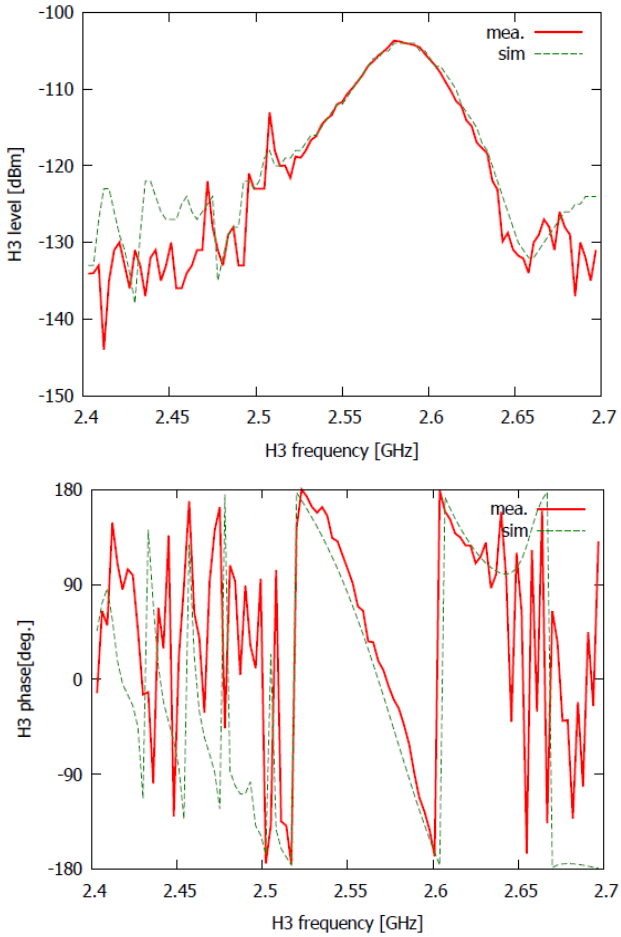


Fig. 3 Measured and simulated 3H responses when an RF signal of + 15 dBm is applied to a SAW resonator

All the device performances are closely related in DPXs and MPXs, compromise is always necessary to fulfill a severe requirement. Thus if requirements given to nonlinearity are relaxed in some extent, other key performances such as insertion loss and isolation will be improved.

## References

[1] L.Maurer, R.Stuhlberger, C.Wicpalek, G.Haberpeuntner and G.Hueberet, "Be Flexible -- Highly flexible digital front–end enhanced CMOS–based RF transceivers," IEEE Microwave Magazine, **9**, 2 (2008) pp. 83-96.

[2] T.Omori, S.Nishiuma, K.Seo, C.J.Ahan, and K.Hashimoto, "Flexible RF One-Chip Active Filter Based on Recursive Architecture in UHF range," Proc. Asia-Pacific Microwave Conf. (2014) pp.1309-1311.

[3] M.A.Dubois, J.F.Carpertier, P.Vincent, C.Billard, G.Parat, C.Muller, P.Ancey and P.Corti, "Monolithic Above-IC Resonator Technology for Integrated Architectures in Mobile and Wireless Communication," IEEE J. Solid State Circuits, **41**, 1 (2006) pp. 7-16.

[4] L.Elbrecht, R.Aigner, C.I.Lin and H.J.Timme, "Integration of Bulk Acoustic Wave Filters: Concepts and Trends," Technical Digest, IEEE Microwave Symp. (2004) pp. 927 - 929
[5] B.Razavi, "Chapter 2 Basic Concept in RF Design," in RF Microelectronics, 2nd Edition, Prentice Hall (2014) pp. 7-90
[6] M.Kadota, T.Nakao, N.Taniguchi, E.Takata, M.Mimura, K.Nishiyama, T.Hada and T.Komura, "Surface Acoustic Wave Duplexer for US Personal Communication Services with Good Temperature Characteristics," Jpn. J. Appl. Phys., **44**, 6B (2005) pp. 4527-4531
[7] R.C.Ruby, P.Bradley, Y.Oshmyansky, A.Chien, and J.D.Larson, "Thin Film Bulk Acoustic Resonators (FBAR) for Wireless Applications," Proc. IEEE Ultrason. Symp. (2001) pp. 813-821.
[8] A.Springer and R,Weigel, "UMTS," Springer Verlag (2002)
[9] I.Fabiano, M.Sosio, A.Liscidini,and R.Castello. "SAW-Less Analog Front-End Receivers for TDD and FDD," IEEE J. of Solid-State Circuits, **48**, 12 (2013) pp. 3067-3079.
[10] M.Ueda, M.Iwaki, T.Nishihara, Y.Satoh, and K.Hashimoto, "A Circuit Model for Nonlinear Simulation of Radio-Frequency Filters Using Bulk Acoustic Wave Resonators," IEEE Trans. Ultrason., Ferroelec., and Freq. Contr., **55**, 4 (2008) pp. 849-856.
[11] R.Nakagawa, T.Suzuki, H.Shimizu, H.Kyoya, K.Nako, and K.Hashimoto, "Discussion about Generation Mechanisms of Third-Order Nonlinear Signals in Surface Acoustic Wave Resonators on the Basis of Simulation," Jpn. J. Appl. Phys., **55**, 7 (2016) 07KD02-1~7
[12] B.Razavi, "Chapter 12 Power Amplifiers," in RF Microelectronics, 2nd Edition, Prentice Hall (2014) pp. 751-832
[13] M.A.M.Al-Shibly, M.H.Habaebi, and J.Chebil, "Carrier aggregation in Long Term Evolution-Advanced," Proc. 2012 IEEE Control and System Graduate Research Colloquium (2012) pp. 154-159.
[13] M.D.Li, M.El-Hakiki, D.Kalim, T.Y.Kim, A.Link, B.Schumann, and R.Aigner, "A Fully Matched LTE-A Carrier Aggregation Quadplexer Based on BAW and SAW Technologies," Proc. IEEE Ultrason. Symp. (2014) 10.1109/ULTSYM.2014.0020
[14] H.Ku, M.D.McKinley, and J.S.Kenney, "Quantifying Memory Effects in RF Power Amplifiers," IEEE Trans. On Microwave Theory and Tech., **50**, 12 (2002) pp.2843-2849
[15] M.Gawasawa, T.Omori, R.Nakagawa, H.Kyoya, and K.Hashimoto, "Vector Measurement of Nonlinear Signals Generated in RF SAW/BAW Devices," Proc. IEEE Ultrason. Symp. (2017) [to be published]